APPENDIX C: TRAFFIC IMPACT STUDY

This page left intentionally blank.

Stantec

Traffic Impact Study —

John F. Kennedy Center for the Performing Arts Expansion Project

October 2013

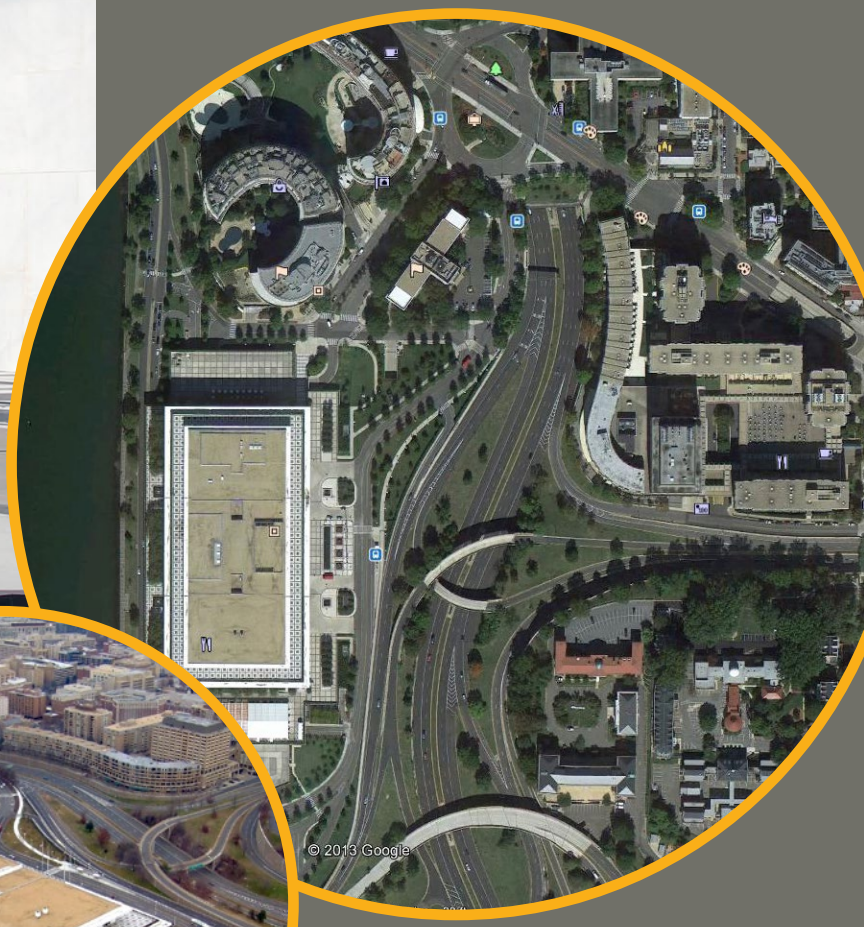

Draft TRAFFIC IMPACT STUDY

JOHN F. KENNEDY CENTER FOR THE PERFORMING ARTS EXPANSION PROJECT

OCTOBER 2013

TRAFFIC IMPACT STUDY
JOHN F. KENNEDY CENTER FOR THE PERFORMING ARTS EXPANSION PROJECT

TABLE OF CONTENTS

Introduction....1

Study Area....3

Existing Conditions....4

- Vehicular Traffic....4
- Public Transportation Facilities....5
- Pedestrian and Bicycle Facilities....6

Future Conditions....7

- Vehicular Traffic Facilities....7
- Public Transportation Facilities....8
- Pedestrian and Bicycle Facilities....8

Mitigation Measures....9

Appendices

Appendix A Traffic Counts
Appendix B AADT Growth Data
Appendix C Analysis Worksheets
Appendix D Garage Service Rate Data

INTRODUCTION

The John F. Kennedy Center for the Performing Arts (Kennedy Center) is proposing to expand the Edward Durell Stone building to provide approximately 60,000 square feet of additional space. The Kennedy Center is the United States' living memorial to President John F. Kennedy and the nation's busiest performing arts facility. It is located at 2700 F Street NW in Washington, DC at the intersection of New Hampshire Avenue, NW and the Rock Creek and Potomac Parkway (RCPP) and was constructed between 1964 and 1971 (See Figure 1). The Kennedy Center is a congressionally designated national showcase for the performing arts. The Kennedy Center is operated as a public and private partnership and receives federal funding each year to pay for maintenance and operation of the building. The Kennedy Center attracts more than three million visitors annually.

This report identifies the existing and future condition with the proposed expansion (action alterantives). Two action alternatives are being evaluated for the expansion of the Kennedy Center. The first action alternative proposes to expand the Kennedy Center to the south. The expansion would include the construction of three land based pavilions; two of which would be connected below grade that would be the site for rehearsal spaces, offices, classrooms, lecture halls, gallery space, and multipurpose space. The second action alternative would redesign the South Terrace which would involve the removal of a section of the concrete perimeter wall and the installation of a reflecting pool. Two additional reflecting pools would be added; one towards the entrance to the new land based pavilions and one adjacent to the RCPP and near the current vehicular entrance. A third pavilion would consist of the construction of a floating pier, approximately 11,000 square feet on the Potomac River. Two options are also being considered to provide access to the river pavilion. Option 1 would entail an at-grade crossing of RCPP from the Kennedy Center to the Rock Creek Multi-Use Trail and the river pavilion. Access to the river pavilion would be provided by two pedestrian crossings from the Rock Creek Multi-Use Trail. Option 2 would provide a single bridge crossing over RCPP that would connect the expansion on land to the river pavilion and two pedestrian crossings from the Rock Creek Multi-Use Trail.

The main roadways in the vicinity of each of the Kennedy Center are described as follows and are shown on Figure 2:

- Rock Creek and Potomac Parkway, NW - Rock Creek and Potomac Parkway, NW is a four-lane north-south roadway with two lanes in each direction divided by a raised cobblestone median. The posted speed limit is 25 mph and carries approximately 28,400 vehicles per day according to the DDOT 2010 Traffic Volumes Map. Trucks over ½ ton are restricted from this roadway.

- F Street, NW - In the vicinity of the site, F Street NW is a two-lane east-west local street with one lane in each direction. The speed limit is 25 mph.

- 25th Street, NW - In the vicinity of the site, 25th Street NW is a three-lane local street, which runs in a north-south direction from the Rock Creek and Potomac Parkway around the Kennedy Center and continues north through Juarez Circle. It has two southbound lanes and one northbound lane between Rock Creek and Potomac Parkway and F Street, NW. It has one southbound land and two northbound lanes with the curb lane for on-street parking between F St and Juarez Circle. The curb parking lane is restricted to two-hour parking between the hours of 7AM to 6:30PM, Monday through Saturday. The speed limit is 25 mph, and it carries approximately 2,542 vehicles per day based on the traffic data collected from September 7th, 2013 to September 13th, 2013.

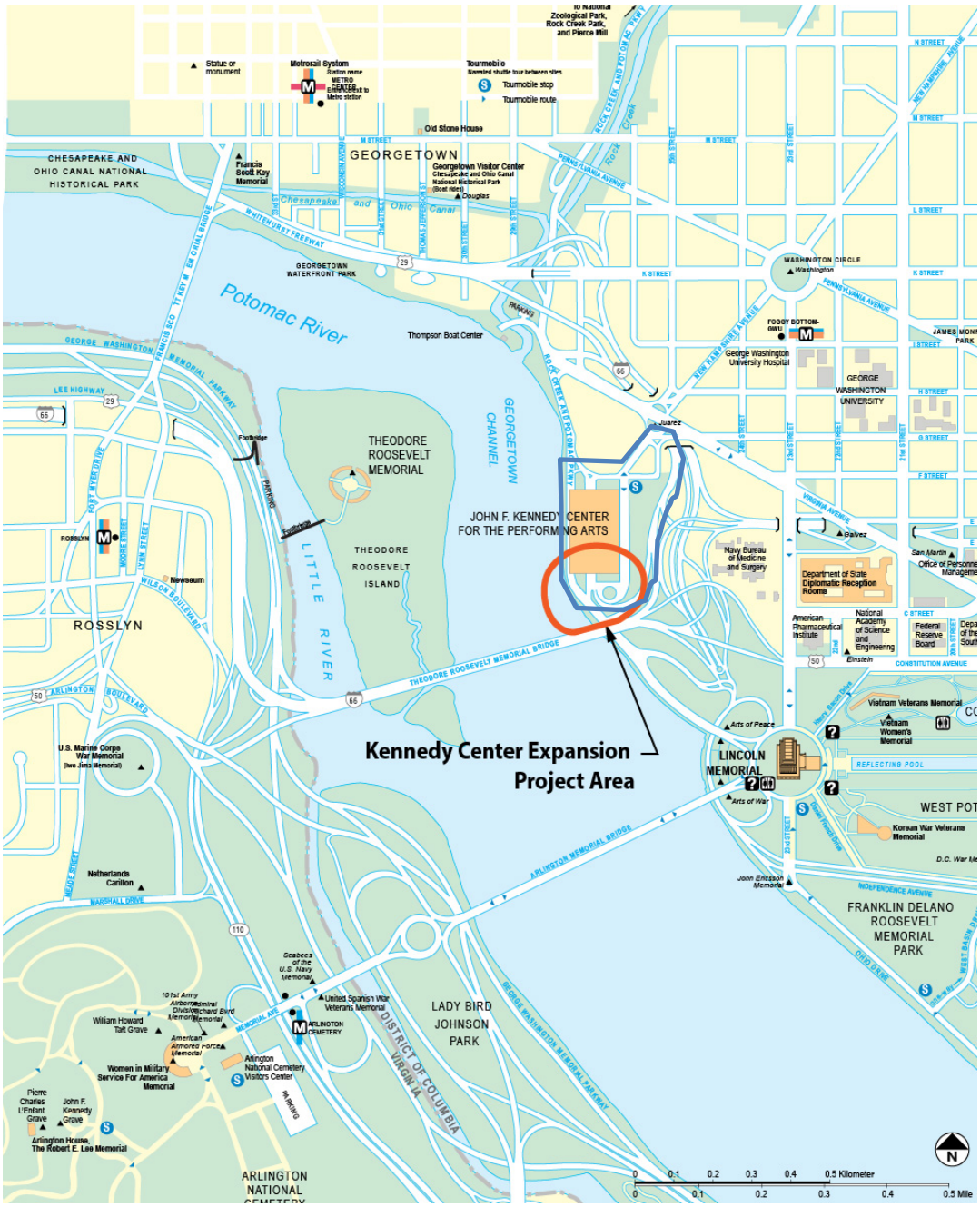

Figure 1: Project Area Map

- New Hampshire Ave, NW - New Hampshire Ave, NW begins at F Street, NW across from the Kennedy Center and runs to the northeast. It has three lanes in each direction divided by a raised planted median. The curb lane along both side of the street in the vicinity of the site is available for on-street parking, which is restricted to two-hour parking between the hours of 7AM to 6:30PM, Monday through Saturday. The speed limit is 25 mph.

STUDY AREA

The four (4) key intersections that were identified as the focus of the analyses for this study are:

- 25th Street, NW at New Hampshire Ave, NW
- F Street, NW at 25th Street, NW
- F Street, NW at New Hampshire Ave, NW
- F Street, NW at Rock Creek Pkwy, NW

The study intersections are described below. Lane use and traffic control is shown in Figure 2.

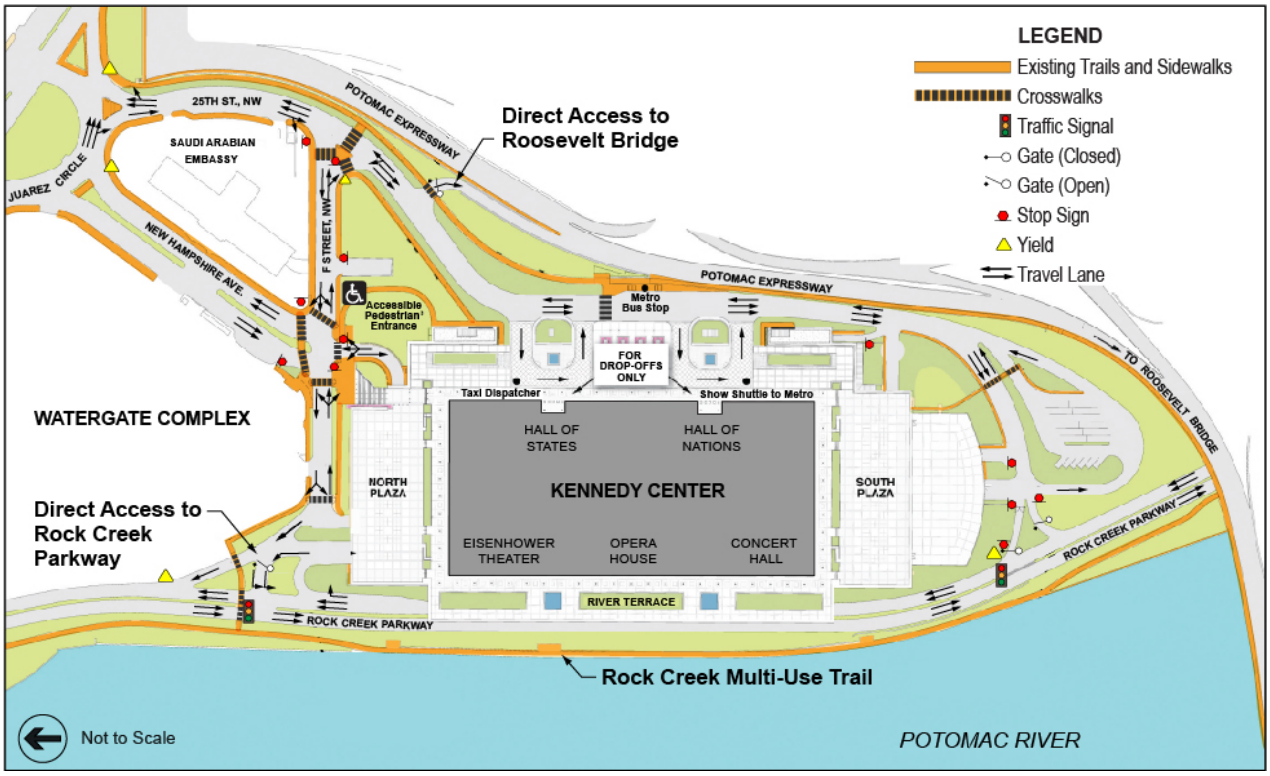

Figure 2: Lane Use and Traffic Control

Juarez Circle and New Hampshire Ave, NW is a T intersection and consists of the southern intersection of New Hampshire Avenue at Juarez Circle. Juarez Circle is the intersection of 25th Street and New Hampshire with Virginia Avenue. Virginia Avenue cuts through the center of the circle with two signalized intersections. All other intersections on the circle are yield controlled. At the southwest quadrant of the circle, New Hampshire Avenue, NW is the northbound leg. It consists of two northbound right-turn lanes entering the circle, and two accepting southbound legs with a third curbside parking lane. The accepting and receiving lanes are divided by a flared planted median with a concrete pedestrian refuge. Striped crosswalks are provided across both the northbound and southbound lanes. The circle at this location is four lanes wide.

F Street, NW at 25th Street, NW is a T-intersection with stop control for southbound and eastbound traffic. The southbound approach consists of a shared left-turn/through lane and two receiving lanes. The northbound approach has a through lane with no left turn allowed and two receiving lanes. The eastbound approach consists of one shared left-turn/right-turn lane with a channelized right-turn island and one receiving lane. The

channelized island also discourages the northbound left turn movement. Marked pedestrian crosswalks are provided on the south and west sides with accessible pedestrian ramps on the right-turn island.

F Street, NW at New Hampshire Ave, NW is a four-way stop controlled intersection. The southbound approach of New Hampshire Ave, NW consists of a left-turn lane, a through lane, and a right turn-lane with three receiving lanes and a raised planted median with a concrete pedestrian refuge. The eastbound, westbound and northbound approaches all have a shared left-turn/through/right-turn lane and one receiving lane. The northbound approach is the North A underground parking garage access. Marked pedestrian crosswalks are provided at all legs.

F Street, NW at Rock Creek Pkwy, NW is a signalized T intersection. The southbound approach of Rock Creek Parkway has two through lanes and two receiving lanes; the northbound approach two through lanes, one channelized right-turn lane, and two receiving lanes. Rock Creek Parkway is divided by a raised cobblestone median. Crosswalks, median cut-through opening, and countdown pedestrian signal with push buttons are provided on this approach. The westbound approach of F Street, NW consists of two double left-turn lanes and one channelized right-turn lane. The northbound channelized right-turn lane feeds to the North C underground parking garage access.

EXISTING CONDITIONS

VEHICULAR TRAFFIC

Peak period traffic counts were performed on Tuesday, September 10, 2014 and Wednesday, September 11, 2013 at the intersections listed previously. Twenty-four hour machine counts were also conducted on 25th Street at the entrance from Rock Creek Parkway, as well as north of the Kennedy Center garage entrances. The peak hour traffic volumes are shown on Figure 3.

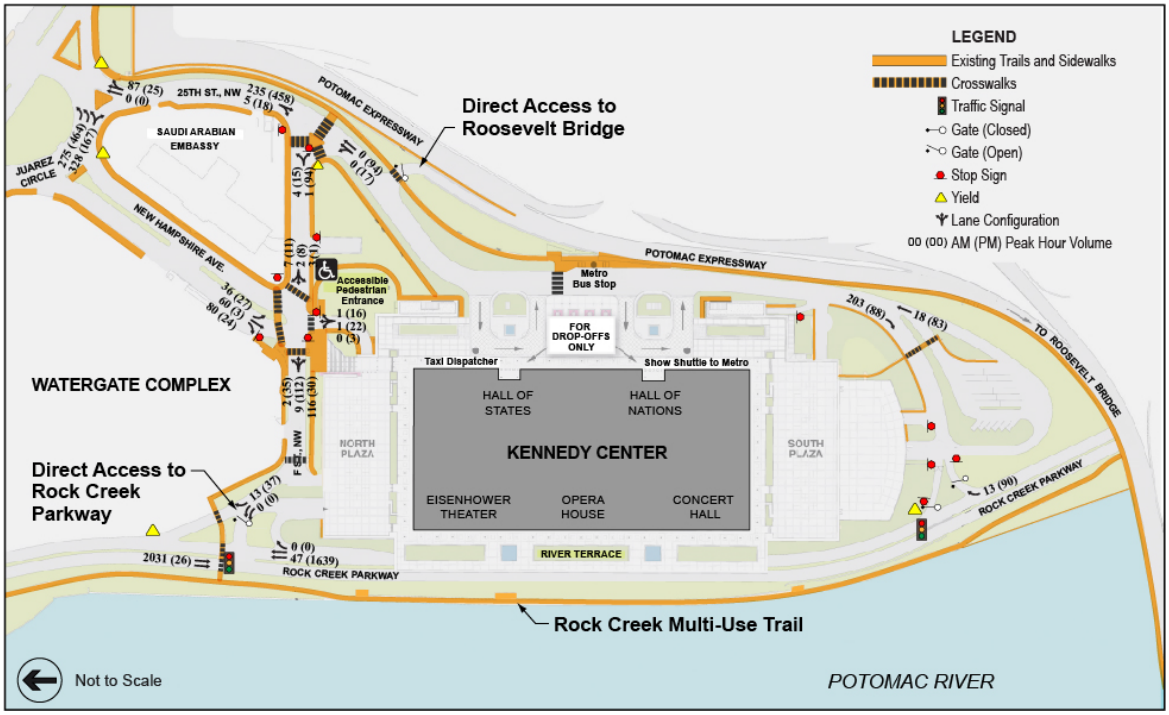

Figure 3: Peak Hour Traffic Counts

Existing analysis was performed using the Critical Lane Analysis Technique. The Critical Lane Analysis Technique examines the combination of vehicular streams with conflicting movement during a peak period. The maximum number of conflicts is termed the critical lane volume (CLV). This CLV value is then compared to a range of values, to determine the approximate Level of Service (LOS) at an intersection. LOS is described in the Highway Capacity Manual (HCM) as a "qualitative measure describing operational conditions within a traffic stream, and their perception by motorist and/or passengers." The HCM defines six LOSs ranging from A to F, with A presenting the optimal operating conditions with minimal delays and F representing congestion. Generally a LOS E or better (v/c ratio <1.0) is considered acceptable in Washington D.C.

The Critical Lane Analysis Technique determines the overall operational LOS for an entire signalized intersection. Unsignalized intersections are assumed to be simple two-phase signalized intersections for the analysis.

Each of the study intersections was analyzed under the existing scenario. The CLV analysis method was used to assess the traffic movements through the key intersections identified in this study. The CLV worksheets are contained in Appendix A, and the LOS and volume-to-capacity (v/c) ratio results of the CLV analysis are presented in Table 1. All study intersections are currently operating at acceptable levels of service.

Table 1: Existing Levels of Service

INTERSECTION	AM PEAK			PM PEAK		
	CLV	v/c RATIO	LOS	CLV	v/c RATIO	LOS
25th Street, NW at New Hampshire Ave, NW	415	0.26	A	270	0.17	A
F Street, NW, 25th Street, NW	263	0.16	A	602	0.38	A
F Street, NW at New Hampshire Ave, NW	210	0.13	A	250	0.16	A
F Street, NW at Rock Creek Pkwy, NW	1117	0.70	B	901	0.56	A

PUBLIC TRANSPORTATION FACILITIES

The following public transportation facilities are available in the vicinity of the Kennedy Center:

- Kennedy Center Shuttle - The Kennedy Center Shuttle connects passengers from the Foggy Bottom-GWU Metro Station to the Kennedy Center. The shuttle stop is located at the drop-off/pick-up area on the east side of the Kennedy Center. The shuttle runs every 15 minutes from 9:45 a.m.-midnight Monday-Friday, 10 a.m.-midnight Saturdays, and noon-midnight Sundays, and 4 p.m.-midnight on federal holidays.
- Metro Bus 80 - Metro Bus 80 North Capitol Street Line provides connection between the Kennedy Center and the Fort Totten Metro Station. The terminal of the bus stop is located at the east side of the Kennedy Center. The MetroBus Route map is shown in Figure 4.

Figure 4: MetroBus Route 80 Map

- Bus and shuttle stops in the study area are shown on Figure 5.

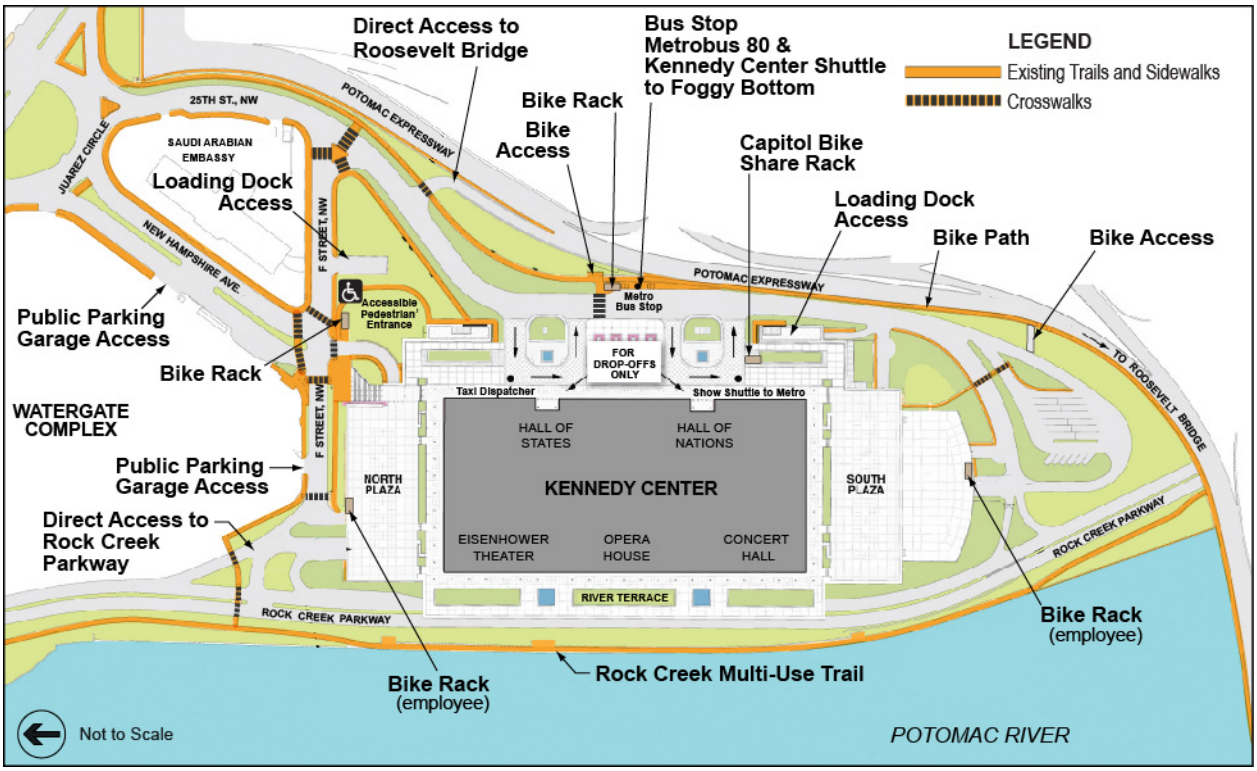

Figure 5: Public Transportation, Pedestrian and Bicycle Facilities

PEDESTRIAN AND BICYCLE FACILITIES

Sidewalks are provided along all roadways around the Kennedy Center, including F Street NW, 25th Street, NW, and New Hampshire Ave, NW. Crosswalks are provided at the intersection of New Hampshire Ave, NW and F Street, NW, and F Street, NW and 25th Street, NW. Crosswalks are provided on Rock Creek Parkway only at intersection of F Street, NW at the northern end of the Kennedy Center.

The Rock Creek Trail, which is an asphalt path in the vicinity of the Kennedy Center, is located on the west side of the Rock Creek and Potomac Pkwy. Another bike route is located on the eastern side of the Kennedy Center between 25th Street, NW and I-66. This bike route crosses the Theodore Roosevelt Memorial Bridge with I-66 and then becomes a concrete path paralleling 25th Street, NW at the bus stop on the eastern side of the Kennedy Center. An asphalt path currently connects the southern parking area at the terminus of 25th Street, NW to the I-66 bike route.

Bike racks are installed around the Kennedy Center to provide bike parking for cyclists. Two bike racks for employee use are located at the north and south parking entrances of the Kennedy Center. Bike racks for public use are located on F Street, NW just to the east of the A North parking entrance and at the bus stop on 25th Street NW on the east side of the Kennedy Center. There is also a Capitol Bikeshare location on the eastern side of the building adjacent to the southern drop-off area.

Pedestrian and bicycle facilities are also shown in Figure 5.

FUTURE CONDITIONS

VEHICULAR TRAFFIC FACILITIES

Impacts to the local roadway networks were assessed by adding traffic that would be generated by the expansion of the Kennedy Center, along with other planned developments, to existing traffic levels. In consultation with DDOT, no nearby planned developments were identified. The Kennedy Center expansion is scheduled to be completed in 2017. Historical ADT levels in the area were obtained from the DDOT ADT maps to determine a general background growth. Based on the area ADT volume, a background growth of 9 percent per year is observed over the past five years. The ADT information is included in Appendix B.

This nine percent growth was compounded to 2017 and the resulting increase was applied to all turning movement volumes for all four intersections. The intersections were then analyzed using CLV methodology and the results are summarized in Table 2. The CLV worksheets are contained in Appendix C.

Table 2: Future No-Build Level of Service

INTERSECTION	AM PEAK			PM PEAK		
	CLV	v/c RATIO	LOS	CLV	v/c RATIO	LOS
25th Street, NW at New Hampshire Ave, NW	577	0.46	A	376	0.24	A
F Street, NW, 25th Street, NW	366	0.23	A	838	0.52	A
F Street, NW at New Hampshire Ave, NW	292	0.18	A	347	0.22	A
F Street, NW at Rock Creek Pkwy, NW	1558	0.97	E	1267	0.79	C

Under future background conditions all intersections will continue to operate at acceptable LOS “E” or better.

All of the options for the planned expansion to the Kennedy Center will house currently existing uses. There will be no resulting increase in employees to the site; therefore, there is negligible increase in traffic for the preferred build scenario during the weekday peak hours. Thus total future traffic with the various build options for the Kennedy Center is equal to the No-Build scenario.

Future No-Build conditions CLV analysis indicates that all of the intersections studied operate at an acceptable level during both the AM and PM peak hours. It is anticipated that the expansion of the Kennedy Center will cause no significant traffic increases at the study intersections; therefore, the traffic will operate under the acceptable level during both the AM and PM peak hour in the total future scenario for all build options.

Vehicle stacking and service rates were also analyzed under the future conditions. If vehicles attempting to enter the parking garage queue back, they may queue onto Rock Creek Parkway and eventually interfere with the operations of the on ramps to Rock Creek Parkway. The existing southern entrance from Rock Creek Parkway is approximately 750 feet from the first intersection point with the ramps, and has 150 feet for onsite queuing between the Parkway and the garage entrance. Two options are being considered for a new southern entrance. Option 1 includes moving the entrance approximately 200 feet further south closer to the ramp; however, there will be an increase of approximately 350 feet for onsite queuing. This is a net increase in available queue space before the roadway operation would be impacted; therefore, there is no negative impact from this change. Option 2 also includes moving the entrance closer to the ramp, though by a lesser amount. Similar to Option 1, there will also be an offsetting increase in space available for onsite queuing resulting in no negative impact.

During construction, the southern garage entrances will be temporarily unavailable. All traffic that currently enters the southern garage entrances will be rerouted to the northern entrances. The maximum service rate for the garage entrances was calculated to be 39 vehicles per 15 minutes using garage entry data provided by the Kennedy Center (see Appendix D). This service rate was compared to the peak entry volumes from the 24 hour counts conducted on 25th Street in front of the Kennedy Center and at the Kennedy Center southern access from Rock Creek Parkway. From these counts it was determined that the peak inbound volume to the garage would be 104 vehicles in a 15 minute time period. Based on the 39 vehicle per 15 minute service rate, this inbound volume would require three inbound service lanes. Garage entrance C North is designed with two outbound lanes and a single inbound lane. During peak inbound periods when the southern entrance is closed, it may be necessary to temporarily convert this entrance to allow for additional inbound lanes. Combined with the available inbound lane at each of the North A and B entrances, these entrances are projected to be sufficient to accommodate all traffic during the construction period with minimal impact to the surrounding roadways.

PUBLIC TRANSPORTATION FACILITIES

The MetroBus route and the Kennedy Center shuttle will both be temporarily impacted by the planned expansion. The MetroBus 80 turnaround at the southern terminus of the route will be impacted by the planned construction. During construction the bus will need to turn around using the southern dropoff area on the eastern side of the Kennedy Center building. This will require coordination with the Kennedy Center to ensure that this dropoff area is clear for bus traffic. All build options include a replacement turnaround area for buses.

The Kennedy Center shuttle also uses this southern terminus of 25th Street, NW as a parking and staging area. During construction the shuttle buses will also need to utilize the drop-off areas on the eastern side of the Kennedy Center and may need to utilize the parking garage or truck delivery area for staging. The bus parking and staging area will be replaced under all build options.

PEDESTRIAN AND BICYCLE FACILITIES

Currently there is one pedestrian crosswalk across RCPP on the north side of the building. The Kennedy Center is proposing two action alternatives for expansion. Alternatives A and B will not impact the pedestrian accessibility in the area. Alternative C will provide an additional pedestrian crossing point over RCPP at the southern end of the Kennedy Center building, increasing pedestrian connectivity.

As previously stated, Option 1 includes an at-grade pedestrian crossing along RCPP. Option 2 includes a pedestrian bridge that will connect the Kennedy Center to the Rock Creek trail. Option 2 will increase pedestrian connectivity without impacting vehicular traffic.

Under Option 1, it is recommended that the at-grade crossing along RCPP be signalized for pedestrian safety. The at-grade pedestrian crossing was analyzed using the future peak hour traffic volumes using Synchro and SimTraffic™ traffic analysis software. The analysis worksheets are included in Appendix C. Assuming a pedestrian volume high enough to produce one pedestrian call per cycle (150 second cycle, 24 pedestrian calls per hour), both the delay and queue were analyzed. The peak direction vehicular traffic on Rock Creek Parkway would experience an average delay of 18.1 seconds (LOS B) during the AM peak hour and 6.6 seconds (LOS A) during the PM peak hour.

Based on the SimTraffic simulations the pedestrian signal is projected to produce a 95th percentile traffic queue of approximately 684 feet in the southbound direction during the AM peak hour and 488 feet in the northbound direction during the PM peak hour. The available storage before these queues would interfere with the adjacent intersections is approximately 1,500 feet in the southbound direction and 600 feet in the northbound direction. Based on this analysis, Option 1 will not interfere with adjacent intersections, but will increase delay. However, this delay would still provide an acceptable level of service.

Sight distance for the at-grade pedestrian crossing was also analyzed. The future plan includes moving the existing southern access from Rock Creek Parkway approximately 200 feet further south, increasing the proximity to the Theodore Roosevelt Memorial bridge abutment and creating the possibility that the pedestrian signal would be blocked from traffic traveling from the I-66/Ohio Drive ramp. The speed limit for this roadway is 25 miles per hour. In the absence of available field measured speed data or design information, it is assumed that the design speed is 35 miles per hour. Based on the AASHTO *Policy on Geometric Designs of Highways and Streets*, for a design speed of 35 miles per hour, the desired stopping sight distance is 250 feet. Based on field observations, the available sight distance through the bridge underpass is at least 400 feet. However depending on the final design of the pedestrian crossing, advance signing would be recommended to mitigate safety concerns.

The existing pedestrian/bike connection from the southern bus parking area to the I-66 bike route will likely be disrupted by the construction; however, any users of this connection can re-route to the northern side of the building resulting in only a minor impact. Likewise the existing bike racks in the southern parking area may be disrupted, but users can transfer to the northern area for the duration of construction. All bicycle facilities will be reestablished when construction is complete, making these impacts minor and temporary.

MITIGATION MEASURES

During construction various measures will be taken to reduce temporary traffic impacts. Current drop-off and pick-up activities at the drop-off area at the Hall of Nations will be monitored and modified as needed to provide access for the MetroBus Route 80 to use this area as the southern terminus of its route. The entrance from Rock Creek Parkway at the south end will be closed and all parking will access the site from the northern side at F Street, NW.

Construction vehicles will travel through the site to a staging area located on the south end. Depending on the phasing of construction a portion of the existing bus lot may be used but more parking for buses will need to be provided. If there is an off-site lot near the site, some arrangement could be made.

After construction is complete, ongoing impacts are negligible, thus no additional traffic mitigation measures are recommended.

Appendix A
Traffic Counts

New Hampshire Ave, NW @ 25th St, NW, Juarez Circle
Cars, Pedestrians, and Bicycles

Job No.: 13-10

Location: New Hampshire Ave, NW @ 25th St, NW, Juarez Circle
Date: 9/10/2013 Tuesday
Recorder: CSS
Interval (dd) : 15
(In Minutes)

County:
Town: Washington DC
Weather: Clear

PEAK HOURS	AM PERIOD 7:00AM-9:00AM	Start	End	Volume	PM PERIOD 3:30PM-6:00PM	Start	End	Volume
		08:30	09:30	690		18:00	19:00	656

Street Name-->					New Hampshire Ave								Juarez Circle				
HOUR	From North				From South				From East				From West				GRAND
ENDING	L	T	R	TOT	L	T	R	TOT	L	T	R	TOT	L	T	R	TOT	TOTAL
00:15																	
00:30																	
00:45																	
01:00																	
01:15																	
01:30																	
01:45																	
02:00																	
02:15																	
02:30																	
02:45																	
03:00																	
03:15																	
03:30																	
03:45																	
04:00																	
04:15																	
04:30																	
04:45																	
05:00																	
05:15																	
05:30																	
05:45																	
06:00																	
06:15																	
06:30																	
06:45					0	0	3	3					0	42	26	68	71
07:00					0	0	5	5					0	49	34	83	88
07:15					0	0	12	12					0	37	40	77	89
07:30					0	0	5	5					0	64	42	106	111
07:45					0	0	11	11					0	57	51	108	119
08:00					0	0	12	12					0	65	52	117	129
08:15					0	0	24	24					0	61	45	106	130
08:30					0	0	13	13					0	62	58	120	133
08:45					**0**	**0**	**17**	**17**					**0**	**68**	**76**	**144**	**161**
09:00					**0**	**0**	**29**	**29**					**0**	**68**	**62**	**130**	**159**
09:15					**0**	**0**	**19**	**19**					**0**	**82**	**104**	**186**	**205**
09:30					**0**	**0**	**22**	**22**					**0**	**57**	**86**	**143**	**165**
09:45																	
10:00																	
10:15																	
10:30																	
10:45																	
11:00																	
11:15																	
11:30																	
11:45																	
12:00																	
12:15																	
12:30																	
12:45																	
13:00																	
13:15																	
13:30																	
13:45																	
14:00																	
14:15																	
14:30																	
14:45																	
15:00																	
15:15																	
15:30																	
15:45																	
16:00																	
16:15					0	0	45	45					0	62	20	82	127
16:30					0	0	52	52					0	77	24	101	153
16:45					0	0	21	21					0	107	34	141	162
17:00					0	0	10	10					0	123	23	146	156
17:15					0	0	16	16					0	116	36	152	168
17:30					0	0	8	8					0	123	27	150	158
17:45					0	0	6	6					0	119	33	152	158
18:00					0	0	7	7					0	99	37	136	143
18:15					**0**	**0**	**2**	**2**					**0**	**127**	**38**	**165**	**167**
18:30					**0**	**0**	**8**	**8**					**0**	**90**	**40**	**130**	**138**
18:45					**0**	**0**	**6**	**6**					**0**	**113**	**51**	**164**	**170**
19:00					**0**	**0**	**9**	**9**					**0**	**134**	**38**	**172**	**181**
19:15																	
19:30																	
19:45																	
20:00																	
20:15																	
20:30																	
20:45																	
21:00																	
TOTAL	**0**	**0**	**0**	**0**	**0**	**0**	**362**	**362**	**0**	**0**	**0**	**0**	**0**	**2002**	**1077**	**3079**	**3441**
AM Peak Vol	0	0	0	0	0	0	87	87	0	0	0	0	0	275	328	603	690
PM Peak Vol	0	0	0	0	0	0	25	25	0	0	0	0	0	464	167	631	656

New Hampshire Ave, NW @ 25th St, NW, Juarez Circle
Cars, Pedestrians, and Bicycles

Job No.: 13-10

Location: New Hampshire Ave, NW @ 25th St, NW, Juarez Circle
Date: 9/10/2013 Tuesday
Recorder: CSS
Interval (dd) : 15
(In Minutes)

County:
Town: Washington DC
Weather: Clear

PEAK HOURS	AM PERIOD 7:00AM-9:00AM	Start	End	Volume	PM PERIOD 3:30PM-6:00PM	Start	End	Volume
		08:30	09:30	690		18:00	19:00	656

PEDESTRIAN SCHOOL CHILDREN & U-TURN BREAKDOWN

Hour Ending		PED.		New Hampshire Ave Bikes	PED.			PED.		Juarez Circle Bikes	PED.	
00:15												
00:30												
00:45												
01:00												
01:15												
01:30												
01:45												
02:00												
02:15												
02:30												
02:45												
03:00												
03:15												
03:30												
03:45												
04:00												
04:15												
04:30												
04:45												
05:00												
05:15												
05:30												
05:45												
06:00												
06:15												
06:30												
06:45				0	2					0	0	
07:00				7	1					0	0	
07:15				9	2					0	4	
07:30				11	2					1	8	
07:45				8	4					0	8	
08:00				16	7					0	6	
08:15				18	7					1	4	
08:30				9	1					0	10	
08:45				12	7					0	4	
09:00				16	3					0	2	
09:15				18	4					1	3	
09:30				11	3					1	1	
09:45												
10:00												
10:15												
10:30												
10:45												
11:00												
11:15												
11:30												
11:45												
12:00												
12:15												
12:30												
12:45												
13:00												
13:15												
13:30												
13:45												
14:00												
14:15												
14:30												
14:45												
15:00												
15:15												
15:30												
15:45												
16:00												
16:15				2	2					0	3	
16:30				1	1					0	2	
16:45				0	3					0	2	
17:00				1	1					0	2	
17:15				0	1					2	1	
17:30				0	3					1	4	
17:45				1	4					2	3	
18:00				0	6					0	2	
18:15				2	8					0	1	
18:30				1	4					0	1	
18:45				0	2					1	0	
19:00				0	2					3	1	
19:15												
19:30												
19:45												
20:00												
20:15												
20:30												
20:45												
21:00												
TOTAL	**0**	**0**	**0**	**143**	**80**	**0**	**0**	**0**	**0**	**13**	**72**	**0**
AM Peak Vol	0	0	0	57	17	0	0	0	0	2	10	0
PM Peak Vol	0	0	0	3	16	0	0	0	0	4	3	0

New Hampshire Ave, NW @ 25th St, NW, Juarez Circle
Cars, Pedestrians, and Bicycles

Job No.: 13-10

Location: New Hampshire Ave, NW @ 25th St, NW, Juarez Circle
Date: 9/10/2013 Tuesday
Recorder: CSS
Interval (dd) : 15
(In Minutes)

County:
Town: Washington DC
Weather: Clear

PEAK HOURS	AM PERIOD 7:00AM-9:00AM	Start	End	Volume	PM PERIOD 3:30PM-6:00PM	Start	End	Volume
		08:30	09:30	690		18:00	19:00	656

Turning Movement Summary:

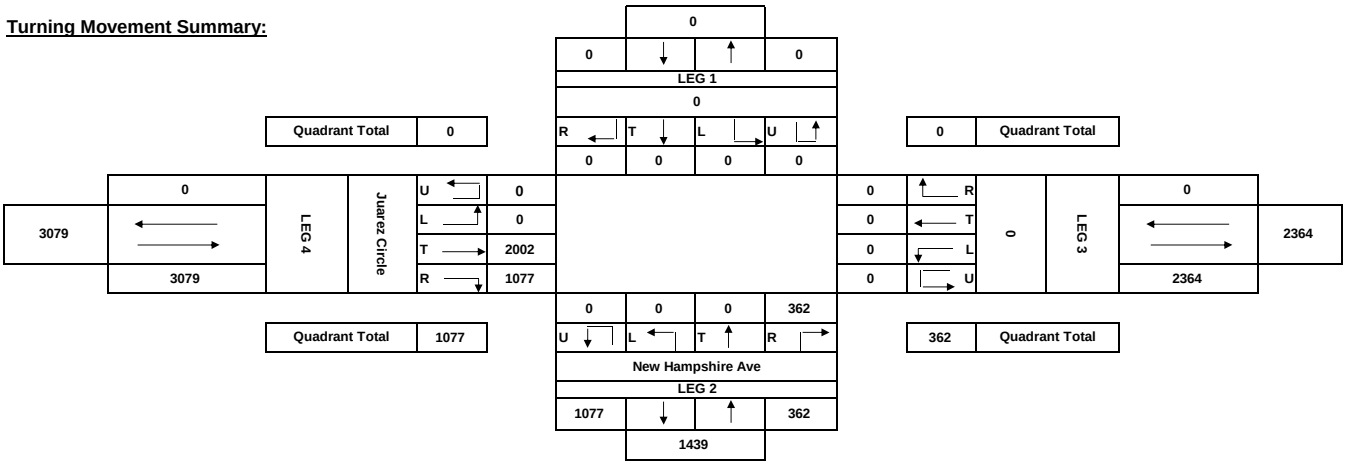

Comments: LOS AM:A PM: A

AM Peak Hour :

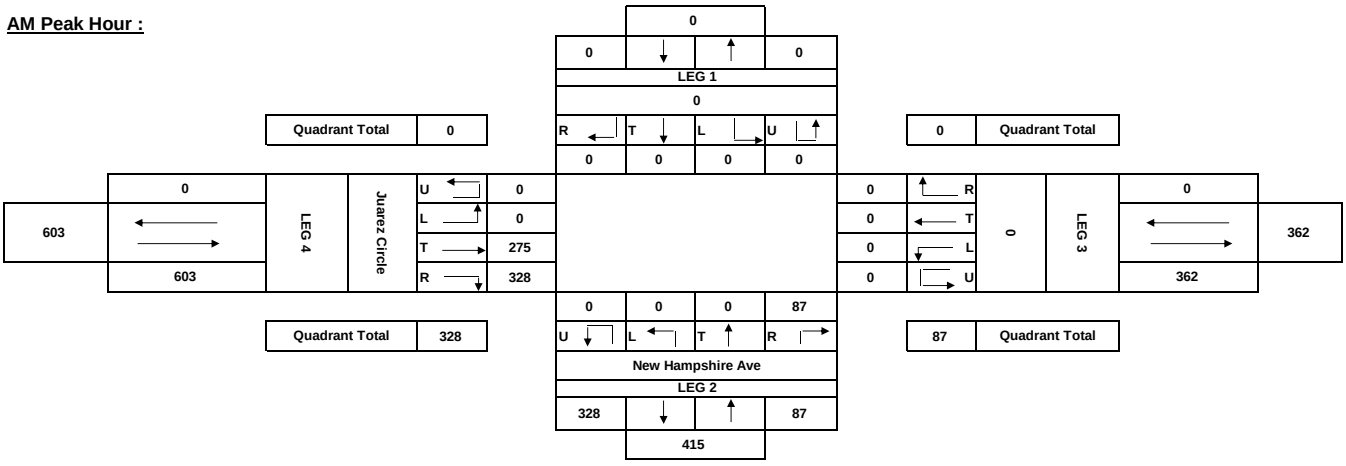

PM Peak Hour :

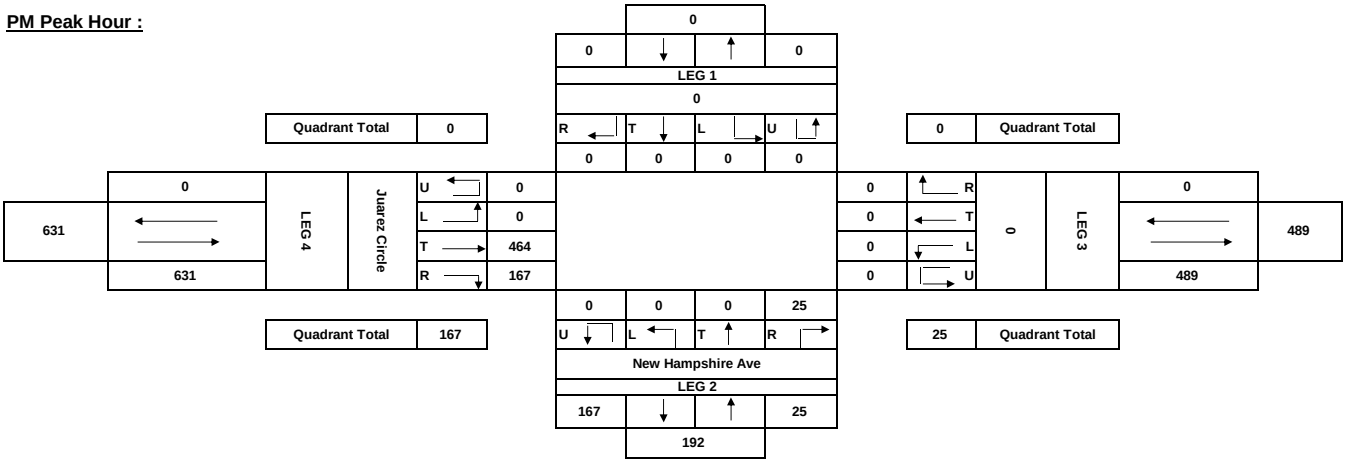

F Street, NW @ Rock Creek Parkway, NW
Cars, Pedestrians, and Bicycles

Job No.: 13-10

Location: F Street, NW at Rock Creek Parkway, NW
Date: 9/11/2013 Wednesday
Recorder: CSS
Interval (dd) : 15
(In Minutes)

County:
Town: Washington DC
Weather: Clear

PEAK HOURS	AM PERIOD 7:00AM-9:00AM	Start	End	Volume	PM PERIOD 3:30PM-6:00PM	Start	End	Volume
		08:00	09:00	2091		16:15	17:15	1702

Street Name-->	Rock Creek Parkway				Rock Creek Parkway				F Street, NW								
HOUR	From North				From South				From East				From West				GRAND
ENDING	L	T	R	TOT	L	T	R	TOT	L	T	R	TOT	L	T	R	TOT	TOTAL
00:15																	
00:30																	
00:45																	
01:00																	
01:15																	
01:30																	
01:45																	
02:00																	
02:15																	
02:30																	
02:45																	
03:00																	
03:15																	
03:30																	
03:45																	
04:00																	
04:15																	
04:30																	
04:45																	
05:00																	
05:15																	
05:30																	
05:45																	
06:00																	
06:15																	
06:30																	
06:45	0	217	0	217	0	20	0	20	0	0	3	3					240
07:00	0	280	0	280	0	11	0	11	0	0	4	4					295
07:15	0	376	0	376	0	3	0	3	0	0	6	6					385
07:30	0	386	0	386	0	6	0	6	0	0	3	3					395
07:45	0	425	0	425	0	5	0	5	0	0	1	1					431
08:00	0	491	0	491	0	8	0	8	0	0	2	2					501
08:15	**0**	**563**	**0**	**563**	**0**	**13**	**0**	**13**	**0**	**0**	**3**	**3**					**579**
08:30	**0**	**467**	**0**	**467**	**0**	**26**	**0**	**26**	**0**	**0**	**5**	**5**					**498**
08:45	**0**	**503**	**0**	**503**	**0**	**2**	**0**	**2**	**0**	**0**	**3**	**3**					**508**
09:00	**0**	**498**	**0**	**498**	**0**	**6**	**0**	**6**	**0**	**0**	**2**	**2**					**506**
09:15	0	396	0	396	0	18	0	18	0	0	3	3					417
09:30	0	308	0	308	0	0	0	0	0	0	6	6					314
09:45																	
10:00																	
10:15																	
10:30																	
10:45																	
11:00																	
11:15																	
11:30																	
11:45																	
12:00																	
12:15																	
12:30																	
12:45																	
13:00																	
13:15																	
13:30																	
13:45																	
14:00																	
14:15																	
14:30																	
14:45																	
15:00																	
15:15																	
15:30																	
15:45																	
16:00																	
16:15	0	3	0	3	0	370	0	370	0	0	11	11					384
16:30	**0**	**8**	**0**	**8**	**0**	**395**	**0**	**395**	**0**	**0**	**6**	**6**					**409**
16:45	**0**	**2**	**0**	**2**	**0**	**387**	**0**	**387**	**0**	**0**	**13**	**13**					**402**
17:00	**0**	**7**	**0**	**7**	**0**	**431**	**0**	**431**	**0**	**0**	**9**	**9**					**447**
17:15	**0**	**9**	**0**	**9**	**0**	**426**	**0**	**426**	**0**	**0**	**9**	**9**					**444**
17:30	0	13	0	13	0	365	0	365	0	0	7	7					385
17:45	0	11	0	11	0	302	0	302	0	0	4	4					317
18:00	0	6	0	6	0	337	0	337	0	0	7	7					350
18:15	0	41	0	41	0	291	0	291	0	0	8	8					340
18:30	0	58	0	58	0	154	0	154	0	0	7	7					219
18:45	0	292	0	292	0	205	0	205	18	0	5	23					520
19:00	0	270	0	270	0	237	0	237	15	0	7	22					529
19:15																	
19:30																	
19:45																	
20:00																	
20:15																	
20:30																	
20:45																	
21:00																	
TOTAL	**0**	**5630**	**0**	**5630**	**0**	**4018**	**0**	**4018**	**33**	**0**	**134**	**167**	**0**	**0**	**0**	**0**	**9815**
AM Peak Vol	0	2031	0	2031	0	47	0	47	0	0	13	13	0	0	0	0	2091
PM Peak Vol	0	26	0	26	0	1639	0	1639	0	0	37	37	0	0	0	0	1702

F Street, NW @ Rock Creek Parkway, NW
Cars, Pedestrians, and Bicycles

Job No.: 13-10

Location: F Street, NW at Rock Creek Parkway, NW
Date: 9/11/2013 Wednesday
Recorder: CSS
Interval (dd) : 15
(In Minutes)

County:
Town: Washington DC
Weather: Clear

PEAK HOURS	AM PERIOD 7:00AM-9:00AM	Start	End	Volume	PM PERIOD 3:30PM-6:00PM	Start	End	Volume
		08:00	09:00	2091		16:15	17:15	1702

PEDESTRIAN SCHOOL CHILDREN & U-TURN BREAKDOWN

Hour	Rock Creek Parkway			Rock Creek Parkway			F Street, NW					
Ending	Bikes	PED.		Bikes	PED.		Bikes	PED.		Bikes	PED.	
00:15												
00:30												
00:45												
01:00												
01:15												
01:30												
01:45												
02:00												
02:15												
02:30												
02:45												
03:00												
03:15												
03:30												
03:45												
04:00												
04:15												
04:30												
04:45												
05:00												
05:15												
05:30												
05:45												
06:00												
06:15												
06:30												
06:45	0	31		0	15		1	1			0	
07:00	2	42		0	25		2	2			0	
07:15	0	39		2	30		2	2			0	
07:30	1	18		2	23		4	4			2	
07:45	1	36		1	12		2	2			0	
08:00	0	9		4	20		1	4			0	
08:15	3	21		2	25		0	1			0	
08:30	1	17		3	18		1	0			2	
08:45	0	22		6	9		0	0			0	
09:00	4	13		2	5		1	2			0	
09:15	6	17		2	9		0	1			0	
09:30	5	13		1	4		1	0			0	
09:45												
10:00												
10:15												
10:30												
10:45												
11:00												
11:15												
11:30												
11:45												
12:00												
12:15												
12:30												
12:45												
13:00												
13:15												
13:30												
13:45												
14:00												
14:15												
14:30												
14:45												
15:00												
15:15												
15:30												
15:45												
16:00												
16:15	3	22		3	9		0	3			5	
16:30	2	18		8	15		1	2			3	
16:45	1	11		2	15		0	0			15	
17:00	1	27		1	3		0	1			5	
17:15	1	35		4	11		0	1			10	
17:30	2	25		2	9		3	1			14	
17:45	1	29		6	5		1	5			7	
18:00	6	7		3	6		2	1			15	
18:15	3	18		1	9		0	1			14	
18:30	5	29		2	7		1	3			25	
18:45	2	26		6	6		1	4			15	
19:00	0	38		2	10		1	6			15	
19:15												
19:30												
19:45												
20:00												
20:15												
20:30												
20:45												
21:00												
TOTAL	**50**	**563**	**0**	**65**	**300**	**0**	**25**	**47**	**0**	**0**	**147**	**0**
AM Peak Vol	8	73	0	13	57	0	2	3	0	0	2	0
PM Peak Vol	5	91	0	15	44	0	1	4	0	0	33	0

F Street, NW @ Rock Creek Parkway, NW
Cars, Pedestrians, and Bicycles

Job No.: 13-10

Location: F Street, NW at Rock Creek Parkway, NW
Date: 9/11/2013 Wednesday
Recorder: CSS
Interval (dd) : 15
(In Minutes)

County:
Town: Washington DC
Weather: Clear

PEAK HOURS	AM PERIOD 7:00AM-9:00AM	Start	End	Volume	PM PERIOD 3:30PM-6:00PM	Start	End	Volume
		08:00	09:00	2091		16:15	17:15	1702

Turning Movement Summary:

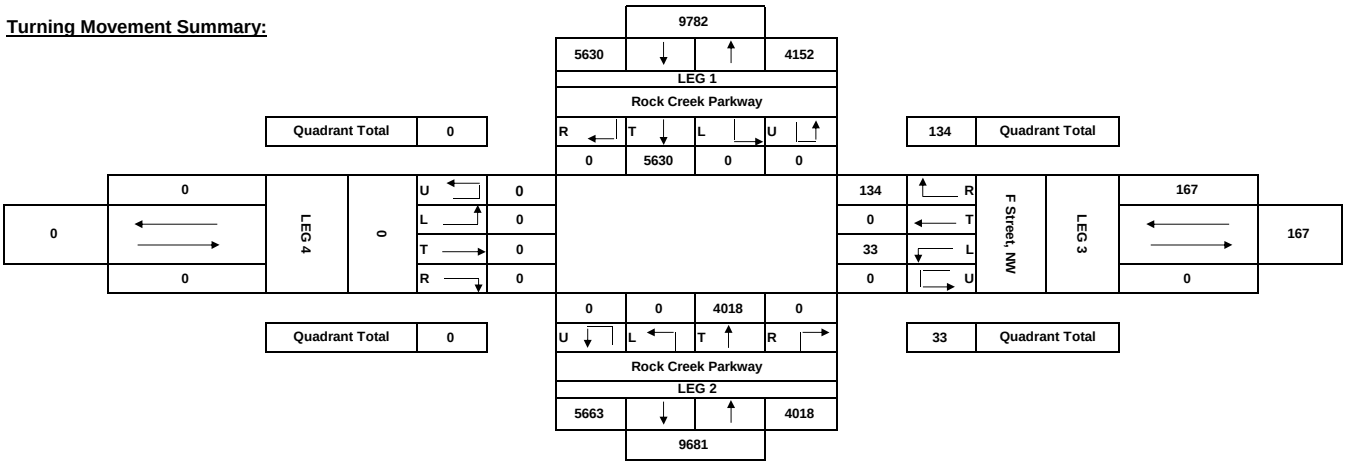

Comments: LOS AM:A PM: A

AM Peak Hour :

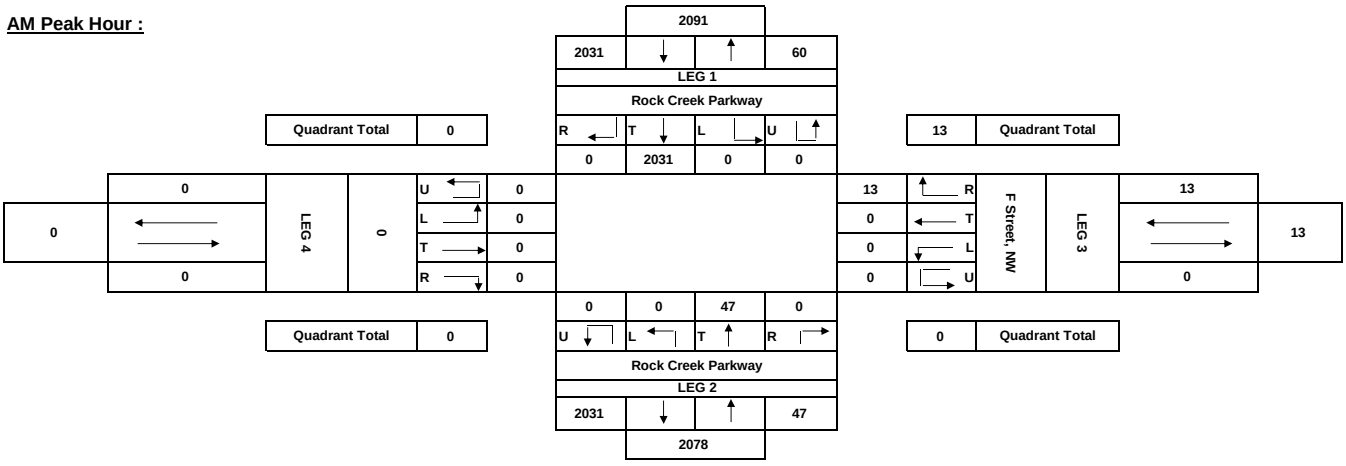

PM Peak Hour :

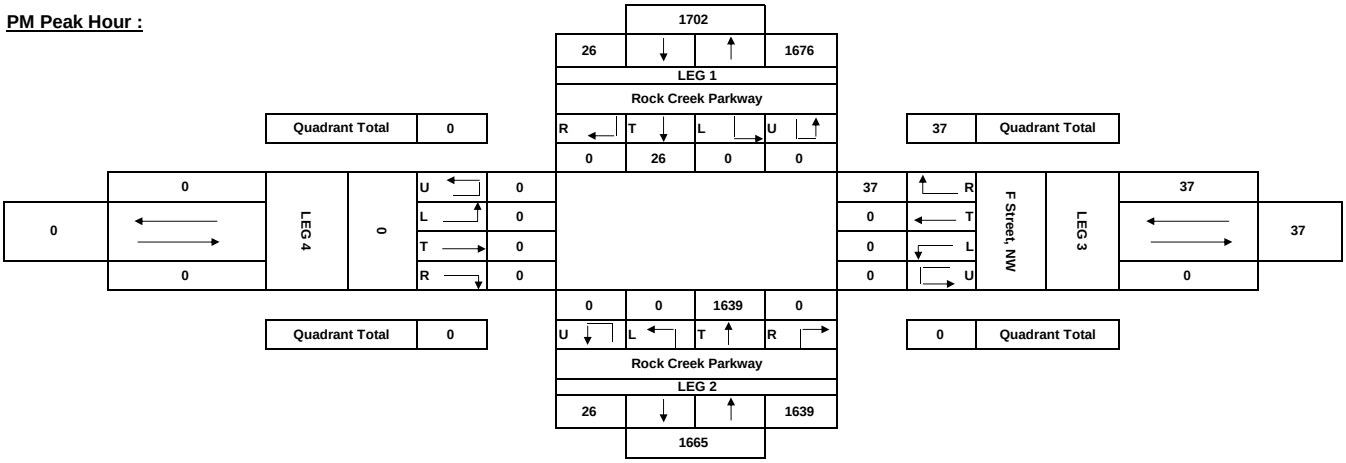

F Street, NW @ New Hampshire Ave, NW
Cars, Pedestrians, and Bicycles

Job No.: 13-10

Location: F Street, NW at New Hampshire Ave, NW
Date: 9/11/2013 Wednesday
Recorder: CSS
Interval (dd) : 15
(In Minutes)

County:
Town: Washington DC
Weather: Clear

PEAK HOURS	AM PERIOD 7:00AM-9:00AM	Start 08:30	End 09:30	Volume 317	PM PERIOD 3:30PM-6:00PM	Start 17:45	End 18:45	Volume 292

Street Name-->	New Hampshire Ave				New Hampshire Ave				F Street, NW				F Street, NW				GRAND
HOUR	From North				From South				From East				From West				TOTAL
ENDING	L	T	R	TOT	L	T	R	TOT	L	T	R	TOT	L	T	R	TOT	
00:15																	
00:30																	
00:45																	
01:00																	
01:15																	
01:30																	
01:45																	
02:00																	
02:15																	
02:30																	
02:45																	
03:00																	
03:15																	
03:30																	
03:45																	
04:00																	
04:15																	
04:30																	
04:45																	
05:00																	
05:15																	
05:30																	
05:45																	
06:00																	
06:15																	
06:30																	
06:45	5	0	2	7	0	0	1	1	1	0	0	1	1	1	10	12	21
07:00	3	7	6	16	1	0	0	1	0	0	2	2	1	1	33	35	54
07:15	6	7	9	22	0	1	0	1	0	0	0	0	0	3	18	21	44
07:30	7	7	12	26	0	0	0	0	0	0	0	0	0	5	9	14	40
07:45	6	4	13	23	1	2	0	3	0	0	1	1	0	2	21	23	50
08:00	4	9	10	23	0	1	0	1	0	0	0	0	0	3	42	45	69
08:15	9	12	6	27	0	0	1	1	1	0	0	1	3	3	33	39	68
08:30	3	7	12	22	0	1	0	1	0	5	0	5	0	0	28	28	56
08:45	**13**	**12**	**12**	**37**	**0**	**0**	**1**	**1**	**0**	**0**	**1**	**1**	**0**	**2**	**36**	**38**	**77**
09:00	**8**	**5**	**20**	**33**	**0**	**1**	**0**	**1**	**0**	**1**	**3**	**4**	**1**	**1**	**40**	**42**	**80**
09:15	**6**	**19**	**15**	**40**	**0**	**0**	**0**	**0**	**0**	**0**	**0**	**0**	**0**	**3**	**19**	**22**	**62**
09:30	**9**	**24**	**33**	**66**	**0**	**0**	**0**	**0**	**3**	**1**	**3**	**7**	**1**	**3**	**21**	**25**	**98**
09:45																	
10:00																	
10:15																	
10:30																	
10:45																	
11:00																	
11:15																	
11:30																	
11:45																	
12:00																	
12:15																	
12:30																	
12:45																	
13:00																	
13:15																	
13:30																	
13:45																	
14:00																	
14:15																	
14:30																	
14:45																	
15:00																	
15:15																	
15:30																	
15:45																	
16:00																	
16:15	10	1	6	17	5	5	1	11	2	0	1	3	8	17	9	34	65
16:30	5	1	7	13	0	0	0	0	0	2	3	5	2	14	9	25	43
16:45	2	3	11	16	1	3	1	5	0	3	3	6	1	8	4	13	40
17:00	7	0	6	13	0	1	3	4	0	0	3	3	3	14	3	20	40
17:15	6	0	4	10	0	1	5	6	0	1	3	4	4	18	8	30	50
17:30	8	1	9	18	1	11	6	18	0	1	5	6	7	25	4	36	78
17:45	5	2	6	13	0	1	4	5	0	0	0	0	5	19	12	36	54
18:00	**8**	**0**	**4**	**12**	**0**	**6**	**5**	**11**	**0**	**2**	**1**	**3**	**11**	**41**	**5**	**57**	**83**
18:15	**9**	**1**	**4**	**14**	**0**	**4**	**5**	**9**	**0**	**0**	**3**	**3**	**10**	**22**	**7**	**39**	**65**
18:30	**4**	**0**	**6**	**10**	**0**	**8**	**4**	**12**	**1**	**3**	**6**	**10**	**8**	**31**	**7**	**46**	**78**
18:45	**6**	**2**	**10**	**18**	**3**	**4**	**2**	**9**	**0**	**3**	**1**	**4**	**6**	**18**	**11**	**35**	**66**
19:00	6	0	8	14	2	0	1	3	0	2	3	5	3	11	3	17	39
19:15																	
19:30																	
19:45																	
20:00																	
20:15																	
20:30																	
20:45																	
21:00																	
TOTAL	**155**	**124**	**231**	**510**	**14**	**50**	**40**	**104**	**8**	**24**	**42**	**74**	**75**	**265**	**392**	**732**	**1420**
AM Peak Vol	36	60	80	176	0	1	1	2	3	2	7	12	2	9	116	127	317
PM Peak Vol	27	3	24	54	3	22	16	41	1	8	11	20	35	112	30	177	292

F Street, NW @ New Hampshire Ave, NW
Cars, Pedestrians, and Bicycles

Job No.: 13-10

Location: F Street, NW at New Hampshire Ave, NW
Date: 9/11/2013 Wednesday
Recorder: CSS
Interval (dd) : 15
(In Minutes)

County:
Town: Washington DC
Weather: Clear

PEAK HOURS	AM PERIOD 7:00AM-9:00AM	Start	End	Volume	PM PERIOD 3:30PM-6:00PM	Start	End	Volume
		08:30	09:30	317		17:45	18:45	292

PEDESTRIAN SCHOOL CHILDREN & U-TURN BREAKDOWN

Hour Ending	New Hampshire Ave Bikes	New Hampshire Ave PED.		New Hampshire Ave Bikes	New Hampshire Ave PED.		F Street, NW Bikes	F Street, NW PED.		F Street, NW Bikes	F Street, NW PED.	
00:15												
00:30												
00:45												
01:00												
01:15												
01:30												
01:45												
02:00												
02:15												
02:30												
02:45												
03:00												
03:15												
03:30												
03:45												
04:00												
04:15												
04:30												
04:45												
05:00												
05:15												
05:30												
05:45												
06:00												
06:15												
06:30												
06:45	0	1		0	6		0	0		0	3	
07:00	1	3		0	0		0	2		0	8	
07:15	1	5		0	0		0	0		2	11	
07:30	0	6		0	0		0	1		0	9	
07:45	1	3		0	1		1	1		0	6	
08:00	1	8		0	2		0	1		2	2	
08:15	1	6		0	0		0	1		0	2	
08:30	0	4		0	1		0	1		0	0	
08:45	2	4		0	2		0	0		0	1	
09:00	1	16		0	0		0	1		1	4	
09:15	1	10		0	5		0	6		0	1	
09:30	5	9		0	3		0	3		0	0	
09:45												
10:00												
10:15												
10:30												
10:45												
11:00												
11:15												
11:30												
11:45												
12:00												
12:15												
12:30												
12:45												
13:00												
13:15												
13:30												
13:45												
14:00												
14:15												
14:30												
14:45												
15:00												
15:15												
15:30												
15:45												
16:00												
16:15	0	24		0	7		0	12		0	0	
16:30	1	31		0	13		0	4		0	0	
16:45	0	38		0	30		0	5		0	1	
17:00	3	41		0	43		0	8		0	2	
17:15	0	47		0	46		1	10		1	1	
17:30	1	38		0	40		0	6		4	0	
17:45	0	22		0	33		0	2		1	0	
18:00	3	29		0	35		0	6		2	1	
18:15	0	35		0	34		1	6		0	3	
18:30	0	42		0	35		2	14		1	1	
18:45	1	32		0	23		4	9		0	3	
19:00	1	37		0	23		0	3		0	2	
19:15												
19:30												
19:45												
20:00												
20:15												
20:30												
20:45												
21:00												
TOTAL	**24**	**491**	**0**	**0**	**382**	**0**	**9**	**102**	**0**	**14**	**61**	**0**
AM Peak Vol	9	39	0	0	10	0	0	10	0	1	6	0
PM Peak Vol	4	138	0	0	127	0	7	35	0	3	8	0

F Street, NW @ New Hampshire Ave, NW
Cars, Pedestrians, and Bicycles

Job No.: 13-10

Location: F Street, NW at New Hampshire Ave, NW
Date: 9/11/2013 Wednesday
Recorder: CSS
Interval (dd) : 15
(In Minutes)

County:
Town: Washington DC
Weather: Clear

PEAK HOURS	AM PERIOD 7:00AM-9:00AM	Start	End	Volume	PM PERIOD 3:30PM-6:00PM	Start	End	Volume
		08:30	09:30	317		17:45	18:45	292

Turning Movement Summary:

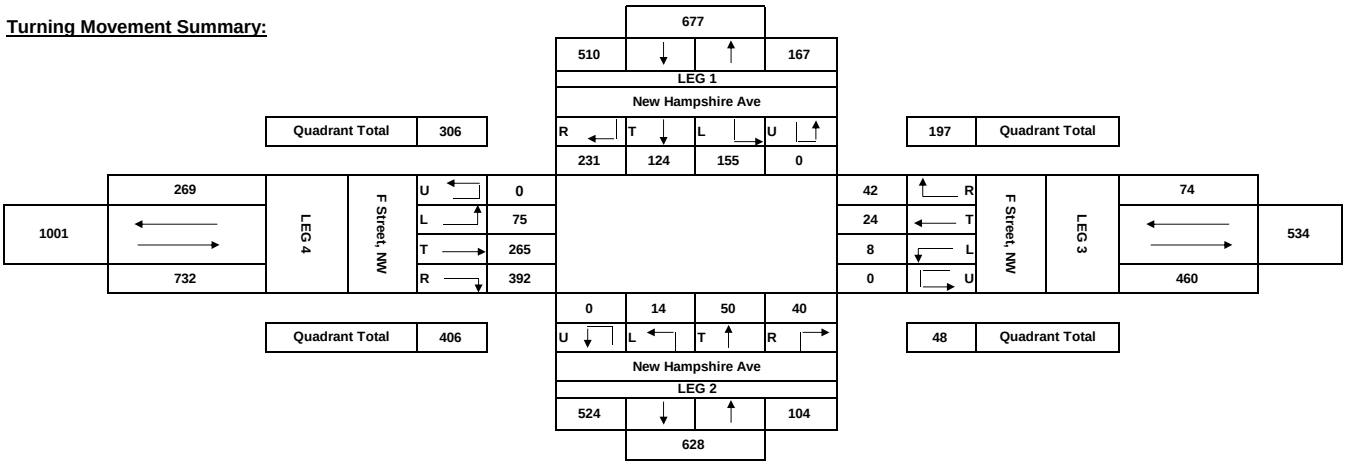

Comments: LOS AM:A PM: A

AM Peak Hour :

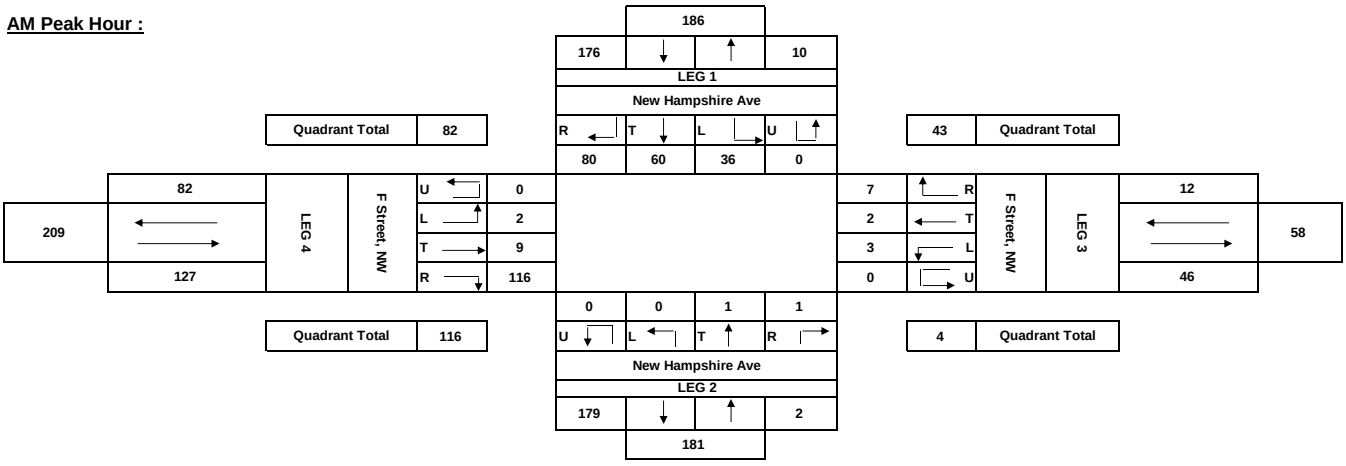

PM Peak Hour :

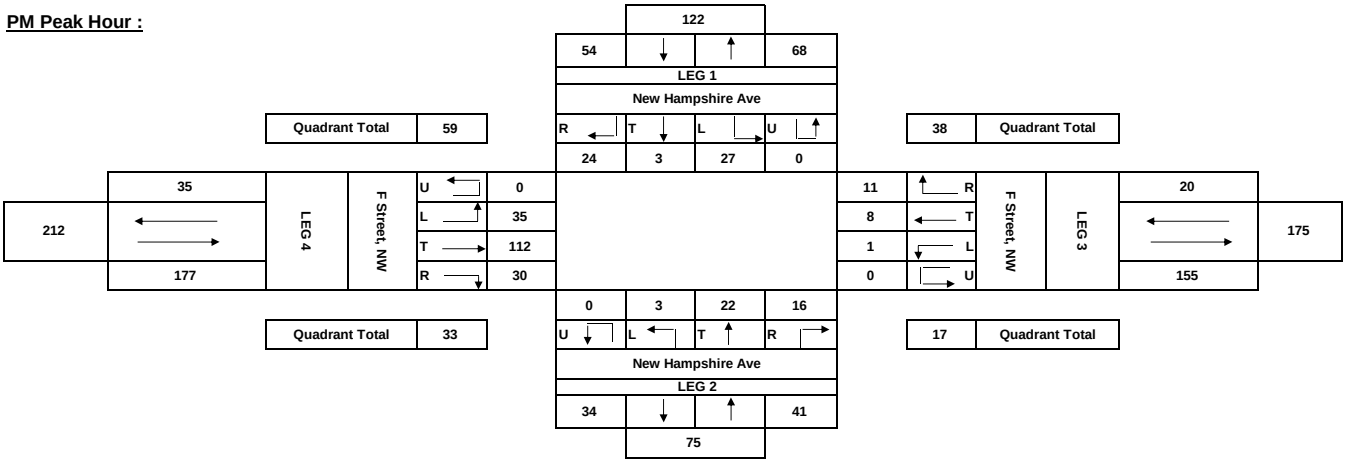

F Street, NW @ 25th St, NW
Cars, Pedestrians, and Bicycles

Job No.: 13-10

Location: F Street, NW at 25th St, NW
Date: 9/10/2013 Tuesday
Recorder: CSS
Interval (dd) : 15
(In Minutes)

County:
Town: Washington DC
Weather: Clear

PEAK HOURS	AM PERIOD 7:00AM-9:00AM	Start	End	Volume	PM PERIOD 3:30PM-6:00PM	Start	End	Volume
		08:30	09:30	245		17:45	18:45	696

Street Name-->	25th St, NW				25th St, NW								F Street, NW				
HOUR	From North				From South				From East				From West				GRAND
ENDING	L	T	R	TOT	L	T	R	TOT	L	T	R	TOT	L	T	R	TOT	TOTAL
00:15																	
00:30																	
00:45																	
01:00																	
01:15																	
01:30																	
01:45																	
02:00																	
02:15																	
02:30																	
02:45																	
03:00																	
03:15																	
03:30																	
03:45																	
04:00																	
04:15																	
04:30																	
04:45																	
05:00																	
05:15																	
05:30																	
05:45																	
06:00																	
06:15																	
06:30																	
06:45	0	21	1	22	0	2	0	2					0	0	1	1	25
07:00	0	36	0	36	0	0	0	0					1	0	0	1	37
07:15	0	41	0	41	0	0	0	0					0	0	1	1	42
07:30	0	34	1	35	0	1	0	1					1	0	2	3	39
07:45	0	49	1	50	0	1	0	1					2	0	0	2	53
08:00	0	48	2	50	0	0	0	0					1	0	0	1	51
08:15	0	62	1	63	0	0	0	0					0	0	1	1	64
08:30	0	48	2	50	0	1	0	1					1	0	0	1	52
08:45	**0**	**51**	**2**	**53**	**0**	**0**	**0**	**0**					**3**	**0**	**0**	**3**	**56**
09:00	**0**	**53**	**1**	**54**	**0**	**0**	**0**	**0**					**1**	**0**	**1**	**2**	**56**
09:15	**0**	**61**	**1**	**62**	**0**	**0**	**0**	**0**					**0**	**0**	**0**	**0**	**62**
09:30	**0**	**70**	**1**	**71**	**0**	**0**	**0**	**0**					**0**	**0**	**0**	**0**	**71**
09:45					0	0	0										
10:00																	
10:15																	
10:30																	
10:45																	
11:00																	
11:15																	
11:30																	
11:45																	
12:00																	
12:15																	
12:30																	
12:45																	
13:00																	
13:15																	
13:30																	
13:45																	
14:00																	
14:15																	
14:30																	
14:45																	
15:00																	
15:15																	
15:30																	
15:45																	
16:00																	
16:15	0	41	5	46	2	9	0	11					5	0	45	50	107
16:30	0	56	5	61	1	8	0	9					3	0	37	40	110
16:45	0	54	1	55	2	14	0	16					1	0	26	27	98
17:00	0	75	2	77	0	11	0	11					2	0	22	24	112
17:15	0	107	1	108	1	11	0	12					9	0	30	39	159
17:30	0	97	4	101	0	21	0	21					5	0	20	25	147
17:45	0	111	2	113	4	28	0	32					7	0	29	36	181
18:00	**0**	**122**	**5**	**127**	**5**	**32**	**0**	**37**					**2**	**0**	**32**	**34**	**198**
18:15	**0**	**104**	**8**	**112**	**2**	**20**	**0**	**22**					**4**	**0**	**21**	**25**	**159**
18:30	**0**	**90**	**4**	**94**	**3**	**24**	**0**	**27**					**6**	**0**	**19**	**25**	**146**
18:45	**0**	**142**	**1**	**143**	**7**	**18**	**0**	**25**					**3**	**0**	**22**	**25**	**193**
19:00	0	81	3	84	2	35	0	37					2	0	24	26	147
19:15																	
19:30																	
19:45																	
20:00																	
20:15																	
20:30																	
20:45																	
21:00																	
TOTAL	**0**	**1654**	**54**	**1708**	**29**	**236**	**0**	**265**	**0**	**0**	**0**	**0**	**59**	**0**	**333**	**392**	**2365**
AM Peak Vol	0	235	5	240	0	0	0	0	0	0	0	0	4	0	1	5	245
PM Peak Vol	0	458	18	476	17	94	0	111	0	0	0	0	15	0	94	109	696

F Street, NW @ 25th St, NW
Cars, Pedestrians, and Bicycles

Job No.: 13-10

Location: F Street, NW at 25th St, NW
Date: 9/10/2013 Tuesday
Recorder: CSS
Interval (dd) : 15
(In Minutes)

County:
Town: Washington DC
Weather: Clear

PEAK HOURS	AM PERIOD 7:00AM-9:00AM	Start	End	Volume	PM PERIOD 3:30PM-6:00PM	Start	End	Volume
		08:30	09:30	245		17:45	18:45	696

PEDESTRIAN SCHOOL CHILDREN & U-TURN BREAKDOWN

Hour Ending	25th St, NW Bikes	25th St, NW PED.		25th St, NW Bikes	25th St, NW PED.		Bikes	PED.		F Street, NW Bikes	F Street, NW PED.	
00:15												
00:30												
00:45												
01:00												
01:15												
01:30												
01:45												
02:00												
02:15												
02:30												
02:45												
03:00												
03:15												
03:30												
03:45												
04:00												
04:15												
04:30												
04:45												
05:00												
05:15												
05:30												
05:45												
06:00												
06:15												
06:30												
06:45	0			0	2			1		0	0	
07:00	0			0	0			0		0	3	
07:15	0			1	0			1		0	2	
07:30	0			0	1			0		1	3	
07:45	0			0	1			2		0	3	
08:00	0			1	0			0		0	7	
08:15	0			0	0			1		0	2	
08:30	1			0	1			1		1	2	
08:45	0			0	0			1		0	5	
09:00	1			0	0			3		0	8	
09:15	0			0	0			0		0	3	
09:30	0			0	0			1		0	1	
09:45												
10:00												
10:15												
10:30												
10:45												
11:00												
11:15												
11:30												
11:45												
12:00												
12:15												
12:30												
12:45												
13:00												
13:15												
13:30												
13:45												
14:00												
14:15												
14:30												
14:45												
15:00												
15:15												
15:30												
15:45												
16:00												
16:15	2			0	9			9		0	3	
16:30	0			1	8			10		0	10	
16:45	1			1	14			9		2	1	
17:00	5			0	11			11		0	10	
17:15	14			2	11			7		0	6	
17:30	16			0	21			6		1	5	
17:45	15			1	20			5		0	8	
18:00	4			1	24			8		0	5	
18:15	9			0	20			9		0	6	
18:30	2			3	24			10		0	11	
18:45	4			0	18			6		1	1	
19:00	2			2	18			13		0	6	
19:15												
19:30												
19:45												
20:00												
20:15												
20:30												
20:45												
21:00												
TOTAL	**76**	**0**	**0**	**13**	**203**	**0**	**0**	**114**	**0**	**6**	**111**	**0**
AM Peak Vol	1	0	0	0	0	0	0	5	0	0	17	0
PM Peak Vol	19	0	0	4	86	0	0	33	0	1	23	0

F Street, NW @ 25th St, NW
Cars, Pedestrians, and Bicycles

Job No.: 13-10

Location: F Street, NW at 25th St, NW
Date: 9/10/2013 Tuesday
Recorder: CSS
Interval (dd) : 15
(In Minutes)

County:
Town: Washington DC
Weather: Clear

PEAK HOURS	AM PERIOD 7:00AM-9:00AM	Start	End	Volume	PM PERIOD 3:30PM-6:00PM	Start	End	Volume
		08:30	09:30	245		17:45	18:45	696

Turning Movement Summary:

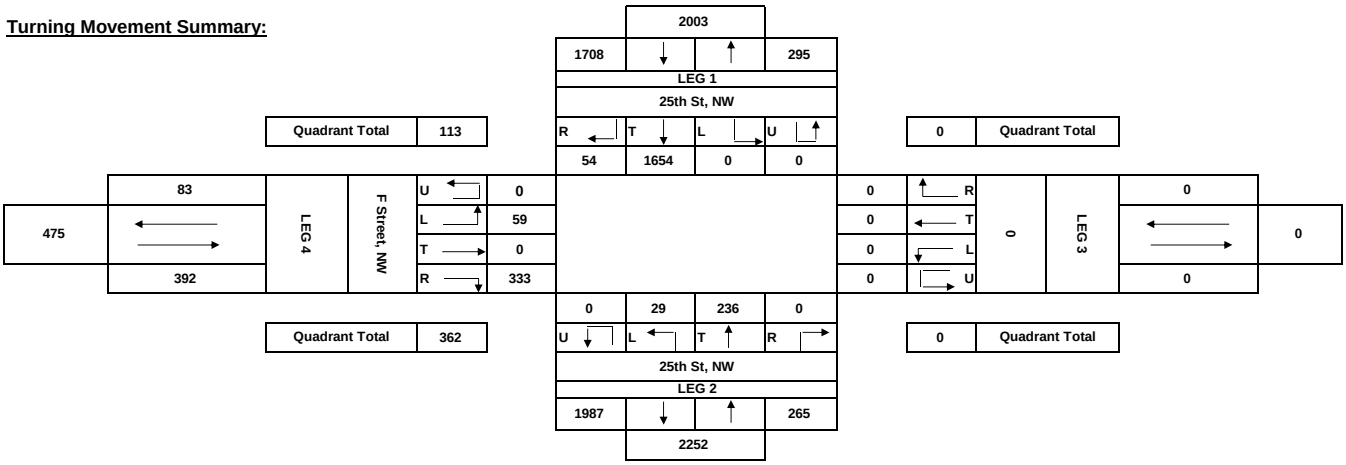

Comments: LOS AM:A PM: A

AM Peak Hour :

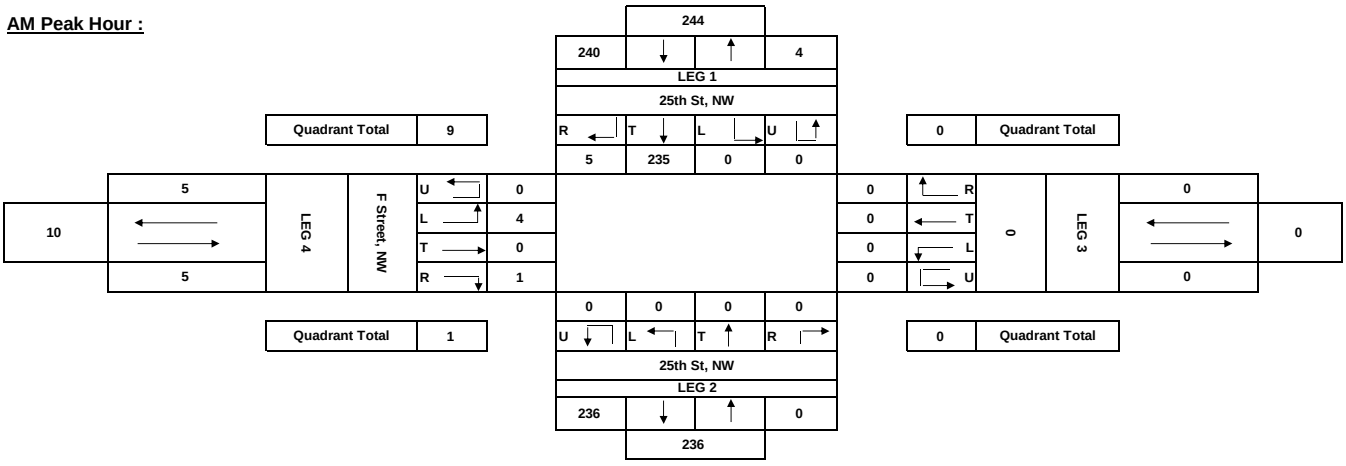

PM Peak Hour :

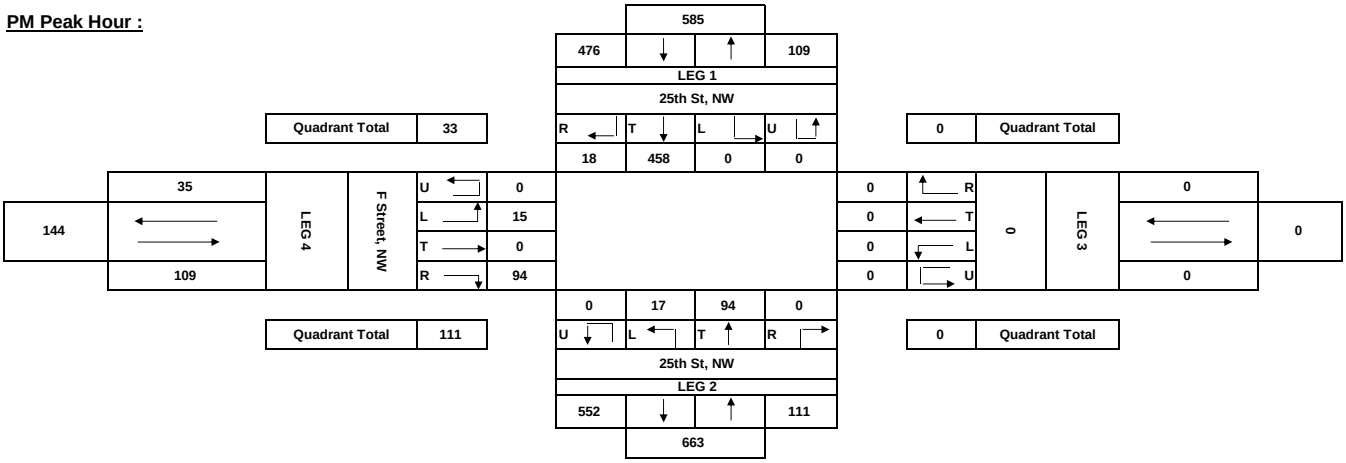

Connor Support Services, LLC

1804 View Top Court
Annapolis, MD 21409

Site Code: KENNEDY

Station ID:

Start	05-Aug-13		Tue		Wed		Thu		Fri		Sat		Sun		Average Da	
Time	A.M.	P.M.	A.M.	P.M.	A.M.	P.M.	A.M.	P.M.	A.M.	P.M.	A.M.	P.M.	A.M.	P.M.	A.M.	P.M.
12:00	*	*	*	*	*	*	0	14	0	10	0	44	0	41	0	27
12:15	*	*	*	*	*	*	0	8	0	14	0	**67**	0	**46**	0	34
12:30	*	*	*	*	*	*	0	14	0	4	0	**83**	0	**69**	0	42
12:45	*	*	*	*	*	*	0	16	0	6	0	**116**	0	**106**	0	61
01:00	*	*	*	*	*	*	0	10	0	4	0	**68**	0	**92**	0	44
01:15	*	*	*	*	*	*	0	8	0	10	0	16	0	14	0	12
01:30	*	*	*	*	*	*	0	12	0	8	0	12	0	7	0	10
01:45	*	*	*	*	*	*	0	18	0	9	0	10	0	10	0	12
02:00	*	*	*	*	*	*	0	13	0	8	0	8	0	10	0	10
02:15	*	*	*	*	*	*	0	12	0	14	0	17	0	8	0	13
02:30	*	*	*	*	*	*	0	22	0	19	0	12	0	16	0	17
02:45	*	*	*	*	*	*	0	10	0	6	0	16	0	4	0	9
03:00	*	*	*	*	*	*	0	4	0	8	0	8	0	6	0	6
03:15	*	*	*	*	*	*	0	14	0	10	0	12	0	2	0	10
03:30	*	*	*	*	*	*	0	6	0	8	0	8	0	6	0	7
03:45	*	*	*	*	*	*	0	8	0	18	0	13	0	3	0	10
04:00	*	*	*	*	*	*	0	24	1	11	0	10	0	6	0	13
04:15	*	*	*	*	*	*	0	16	0	10	0	8	0	8	0	10
04:30	*	*	*	*	*	*	12	19	4	25	0	14	0	13	4	18
04:45	*	*	*	*	*	*	10	14	8	22	0	18	0	14	4	17
05:00	*	*	*	*	*	*	1	28	10	14	0	15	0	24	3	20
05:15	*	*	*	*	*	*	15	42	12	42	8	28	3	45	10	39
05:30	*	*	*	*	*	*	16	26	12	34	6	16	2	27	9	26
05:45	*	*	*	*	*	*	24	48	19	40	2	26	6	32	13	36
06:00	*	*	*	*	*	*	26	44	16	40	0	21	2	30	11	34
06:15	*	*	*	*	*	*	11	**36**	11	**36**	4	24	2	49	7	**36**
06:30	*	*	*	*	*	*	0	**44**	0	**40**	4	38	4	58	2	**45**
06:45	*	*	*	*	*	*	0	**56**	0	**64**	14	54	6	76	5	**62**
07:00	*	*	*	*	*	*	0	**50**	1	**56**	7	54	4	58	3	**54**
07:15	*	*	*	*	*	*	1	16	1	20	2	21	2	18	2	19
07:30	*	*	*	*	*	*	2	4	1	8	0	2	0	7	1	5
07:45	*	*	*	*	*	*	1	2	0	4	2	9	3	6	2	5
08:00	*	*	*	*	*	*	2	3	0	6	0	17	2	3	1	7
08:15	*	*	*	*	*	*	1	6	0	0	4	11	8	4	3	5
08:30	*	*	*	*	*	*	1	12	0	6	9	5	4	5	4	7
08:45	*	*	*	*	*	*	0	4	0	9	3	3	7	3	2	5
09:00	*	*	*	*	*	*	1	8	0	6	10	6	8	4	5	6
09:15	*	*	*	*	*	*	0	0	2	4	11	4	10	8	6	4
09:30	*	*	*	*	*	*	**26**	4	**19**	4	10	2	6	8	15	4
09:45	*	*	*	*	*	*	**32**	7	**17**	6	6	4	16	3	18	5
10:00	*	*	*	*	*	*	**22**	12	**18**	7	6	7	5	9	13	9
10:15	*	*	*	*	*	*	**13**	5	**16**	4	8	8	6	6	11	6
10:30	*	*	*	*	*	*	10	3	8	4	23	5	13	6	14	4
10:45	*	*	*	*	*	*	12	7	16	4	8	5	20	3	14	5
11:00	*	*	*	*	*	*	14	0	13	0	**12**	4	**18**	3	**14**	2
11:15	*	*	*	*	*	*	6	0	8	2	**20**	1	**22**	0	**14**	1
11:30	*	*	*	*	*	*	6	0	4	3	**40**	2	**38**	0	**22**	1
11:45	*	*	*	*	*	*	19	2	8	0	**35**	0	**24**	2	**22**	1
Total	0	0	0	0	0	0	284	731	225	687	254	952	241	978	254	835
Day Total	0		0		0		1015		912		1206		1219		1089	
% Splits	0.0%	0.0%	0.0%	0.0%	0.0%	0.0%	28.0 %	72.0 %	24.7 %	75.3 %	21.1 %	78.9 %	19.8 %	80.2 %	23.3 %	76.7%
Peak	-	-	-	-	-	-	09:30	06:15	09:30	06:15	11:00	00:15	11:00	00:15	11:00	06:15
Vol.	-	-	-	-	-	-	93	186	70	196	107	334	102	313	72	197
P.H.F.							0.727	0.830	0.921	0.766	0.669	0.720	0.671	0.738	0.818	0.794

Connor Support Services, LLC

1804 View Top Court
Annapolis, MD 21409

Site Code: KEMN NB

Station ID:

Start	02-Sep-13		Tue		Wed		Thu		Fri		Sat		Sun		Average Da	
Time	A.M.	P.M.	A.M.	P.M.	A.M.	P.M.	A.M.	P.M.	A.M.	P.M.	A.M.	P.M.	A.M.	P.M.	A.M.	P.M.
12:00	*	*	*	*	*	*	*	*	*	*	13	14	6	**22**	10	**18**
12:15	*	*	*	*	*	*	*	*	*	*	4	7	2	**35**	3	**21**
12:30	*	*	*	*	*	*	*	*	*	*	1	9	0	**68**	0	**38**
12:45	*	*	*	*	*	*	*	*	*	*	4	13	4	**22**	4	**18**
01:00	*	*	*	*	*	*	*	*	*	*	0	16	4	5	2	10
01:15	*	*	*	*	*	*	*	*	*	*	1	16	2	14	2	15
01:30	*	*	*	*	*	*	*	*	*	*	2	12	4	9	3	10
01:45	*	*	*	*	*	*	*	*	*	*	0	13	2	12	1	12
02:00	*	*	*	*	*	*	*	*	*	*	0	20	4	9	2	14
02:15	*	*	*	*	*	*	*	*	*	*	0	7	4	12	2	10
02:30	*	*	*	*	*	*	*	*	*	*	1	9	1	6	1	8
02:45	*	*	*	*	*	*	*	*	*	*	2	11	1	7	2	9
03:00	*	*	*	*	*	*	*	*	*	*	1	7	0	12	0	10
03:15	*	*	*	*	*	*	*	*	*	*	2	8	2	15	2	12
03:30	*	*	*	*	*	*	*	*	*	*	2	20	1	10	2	15
03:45	*	*	*	*	*	*	*	*	*	*	0	21	1	8	0	14
04:00	*	*	*	*	*	*	*	*	*	*	2	16	1	23	2	20
04:15	*	*	*	*	*	*	*	*	*	*	1	17	0	13	0	15
04:30	*	*	*	*	*	*	*	*	*	*	0	15	2	14	1	14
04:45	*	*	*	*	*	*	*	*	*	*	0	12	0	22	0	17
05:00	*	*	*	*	*	*	*	*	*	*	1	23	0	23	0	23
05:15	*	*	*	*	*	*	*	*	*	*	2	24	4	17	3	20
05:30	*	*	*	*	*	*	*	*	*	*	1	25	0	11	0	18
05:45	*	*	*	*	*	*	*	*	*	*	1	32	5	19	3	26
06:00	*	*	*	*	*	*	*	*	*	*	2	20	2	20	2	20
06:15	*	*	*	*	*	*	*	*	*	*	1	17	5	12	3	14
06:30	*	*	*	*	*	*	*	*	*	*	4	18	4	12	4	15
06:45	*	*	*	*	*	*	*	*	*	*	5	22	3	8	4	15
07:00	*	*	*	*	*	*	*	*	*	*	2	26	5	8	4	17
07:15	*	*	*	*	*	*	*	*	*	*	2	34	1	22	2	28
07:30	*	*	*	*	*	*	*	*	*	*	2	16	2	16	2	16
07:45	*	*	*	*	*	*	*	*	*	*	2	26	4	9	3	18
08:00	*	*	*	*	*	*	*	*	*	*	1	17	4	18	2	18
08:15	*	*	*	*	*	*	*	*	*	*	3	12	7	18	5	15
08:30	*	*	*	*	*	*	*	*	*	*	3	46	7	5	5	26
08:45	*	*	*	*	*	*	*	*	*	*	2	32	7	15	4	24
09:00	*	*	*	*	*	*	*	*	*	*	2	22	6	10	4	16
09:15	*	*	*	*	*	*	*	*	*	*	3	8	14	9	8	8
09:30	*	*	*	*	*	*	*	*	*	*	5	**12**	8	12	6	12
09:45	*	*	*	*	*	*	*	*	*	*	9	**23**	17	5	13	14
10:00	*	*	*	*	*	*	*	*	*	*	**12**	**52**	12	16	12	34
10:15	*	*	*	*	*	*	*	*	*	*	**16**	**28**	18	7	17	18
10:30	*	*	*	*	*	*	*	*	*	*	**10**	10	18	26	14	18
10:45	*	*	*	*	*	*	*	*	*	*	**11**	24	17	9	14	16
11:00	*	*	*	*	*	*	*	*	*	*	6	16	**28**	7	**17**	12
11:15	*	*	*	*	*	*	*	*	*	*	14	12	**16**	3	**15**	8
11:30	*	*	*	*	*	*	*	*	*	*	8	6	**35**	1	**22**	4
11:45	*	*	*	*	*	*	*	*	*	*	6	4	**32**	5	**19**	4
Total	0	0	0	0	0	0	0	0	0	0	172	870	322	681	246	777
Day Total	0		0		0		0		0		1042		1003		1023	
% Splits	0.0%	0.0%	0.0%	0.0%	0.0%	0.0%	0.0%	0.0%	0.0%	0.0%	16.5 %	83.5 %	32.1 %	67.9 %	24.0 %	76.0%
Peak	-	-	-	-	-	-	-	-	-	-	10:00	09:30	11:00	12:00	11:00	12:00
Vol.	-	-	-	-	-	-	-	-	-	-	49	115	111	147	73	95
P.H.F.											0.766	0.553	0.793	0.540	0.830	0.625

Connor Support Services, LLC

1804 View Top Court
Annapolis, MD 21409

Site Code: KEMN NB

Station ID:

Start	09-Sep-13		Tue		Wed		Thu		Fri		Sat		Sun		Average Da	
Time	A.M.	P.M.	A.M.	P.M.	A.M.	P.M.	A.M.	P.M.	A.M.	P.M.	A.M.	P.M.	A.M.	P.M.	A.M.	P.M.
12:00	4	10	4	12	7	16	6	15	12	18	*	*	*	*	7	14
12:15	0	9	2	9	4	12	2	17	4	13	*	*	*	*	2	12
12:30	1	14	1	16	1	15	2	7	0	12	*	*	*	*	1	13
12:45	0	6	1	18	1	10	1	8	2	10	*	*	*	*	1	10
01:00	0	5	0	10	0	15	1	10	2	8	*	*	*	*	1	10
01:15	0	15	1	7	1	12	2	12	2	20	*	*	*	*	1	13
01:30	2	15	1	12	0	15	0	10	0	14	*	*	*	*	1	13
01:45	0	11	0	15	0	20	0	11	0	22	*	*	*	*	0	16
02:00	0	11	0	20	0	14	1	18	2	16	*	*	*	*	1	16
02:15	1	13	0	21	0	20	1	19	1	14	*	*	*	*	1	17
02:30	0	13	0	12	2	19	0	14	1	11	*	*	*	*	1	14
02:45	1	13	0	11	0	9	0	10	1	14	*	*	*	*	0	11
03:00	0	7	0	12	0	14	0	19	0	13	*	*	*	*	0	13
03:15	0	17	0	12	0	15	0	18	0	16	*	*	*	*	0	16
03:30	0	18	0	21	1	11	0	21	0	19	*	*	*	*	0	18
03:45	1	18	1	17	0	15	0	18	0	18	*	*	*	*	0	17
04:00	1	17	0	18	0	17	0	26	0	23	*	*	*	*	0	20
04:15	0	17	1	13	1	20	0	29	0	14	*	*	*	*	0	19
04:30	0	20	0	22	0	14	0	25	0	23	*	*	*	*	0	21
04:45	0	21	1	15	2	21	0	16	2	23	*	*	*	*	1	19
05:00	1	16	1	15	2	20	0	29	2	27	*	*	*	*	1	21
05:15	3	**26**	3	**28**	3	22	4	22	4	25	*	*	*	*	3	**25**
05:30	8	**31**	3	**30**	4	18	4	22	5	26	*	*	*	*	5	**25**
05:45	5	**22**	8	**40**	3	**16**	5	28	2	30	*	*	*	*	5	**27**
06:00	7	**30**	8	**34**	8	**23**	8	26	6	20	*	*	*	*	7	**27**
06:15	2	18	1	26	3	**26**	1	31	4	18	*	*	*	*	2	24
06:30	1	24	6	30	1	**21**	0	28	4	22	*	*	*	*	2	25
06:45	3	9	4	32	6	5	3	20	6	17	*	*	*	*	4	17
07:00	4	8	2	30	1	12	3	36	2	**26**	*	*	*	*	2	22
07:15	1	16	3	35	3	16	5	29	5	**32**	*	*	*	*	3	26
07:30	7	10	4	30	4	16	2	40	6	**40**	*	*	*	*	5	27
07:45	7	8	4	14	7	18	6	25	3	**30**	*	*	*	*	5	19
08:00	6	5	5	12	3	5	8	10	2	18	*	*	*	*	5	10
08:15	1	12	3	12	5	9	1	9	6	10	*	*	*	*	3	10
08:30	5	11	3	12	4	5	4	12	7	20	*	*	*	*	5	12
08:45	3	8	3	8	5	22	7	20	4	14	*	*	*	*	4	14
09:00	5	10	8	13	7	17	5	28	6	20	*	*	*	*	6	18
09:15	4	3	6	17	8	9	11	18	11	18	*	*	*	*	8	13
09:30	14	10	**23**	26	**12**	10	11	34	11	26	*	*	*	*	**14**	21
09:45	10	24	**15**	24	**16**	11	15	32	9	13	*	*	*	*	**13**	21
10:00	11	10	**8**	26	**10**	26	11	**26**	10	9	*	*	*	*	**10**	19
10:15	7	12	**18**	37	**17**	16	8	**24**	10	3	*	*	*	*	**12**	18
10:30	**12**	24	6	37	12	7	11	**9**	9	10	*	*	*	*	10	17
10:45	**9**	5	12	26	10	7	11	**75**	13	7	*	*	*	*	11	24
11:00	**17**	7	7	13	8	4	**11**	24	**13**	3	*	*	*	*	11	10
11:15	**10**	6	14	13	12	8	**11**	6	**18**	8	*	*	*	*	13	8
11:30	8	4	8	7	13	3	**15**	5	**16**	9	*	*	*	*	12	6
11:45	9	2	12	4	6	2	**17**	1	**14**	2	*	*	*	*	12	2
Total	191	641	211	924	213	678	214	992	237	824	0	0	0	0	211	810
Day Total	832		1135		891		1206		1061		0		0		1021	
% Splits	23.0 %	77.0 %	18.6 %	81.4 %	23.9 %	76.1 %	17.7 %	82.3 %	22.3 %	77.7 %	0.0%	0.0%	0.0%	0.0%	20.7 %	79.3%
Peak	10:30	05:15	09:30	05:15	09:30	05:45	11:00	10:00	11:00	07:00	-	-	-	-	09:30	05:15
Vol.	48	109	64	132	55	86	54	134	61	128	-	-	-	-	49	104
P.H.F.	0.706	0.879	0.696	0.825	0.809	0.827	0.794	0.447	0.847	0.800					0.875	0.963

ADT ADT 1,028 AADT 1,028

Connor Support Services, LLC

1804 View Top Court
Annapolis, MD 21409

Site Code: KENNEDY

Station ID:

Start	12-Aug-13		Tue		Wed		Thu		Fri		Sat		Sun		Average Da	
Time	A.M.	P.M.	A.M.	P.M.	A.M.	P.M.	A.M.	P.M.	A.M.	P.M.	A.M.	P.M.	A.M.	P.M.	A.M.	P.M.
12:00	0	8	0	7	0	36	*	*	*	*	*	*	*	*	0	17
12:15	0	6	0	6	0	**60**	*	*	*	*	*	*	*	*	0	24
12:30	0	13	0	12	0	**111**	*	*	*	*	*	*	*	*	0	45
12:45	0	10	0	14	0	**120**	*	*	*	*	*	*	*	*	0	48
01:00	0	4	0	8	0	**73**	*	*	*	*	*	*	*	*	0	28
01:15	0	13	0	17	0	22	*	*	*	*	*	*	*	*	0	17
01:30	0	**18**	0	8	0	9	*	*	*	*	*	*	*	*	0	12
01:45	0	**12**	0	14	0	20	*	*	*	*	*	*	*	*	0	15
02:00	0	**10**	0	10	0	14	*	*	*	*	*	*	*	*	0	11
02:15	0	**14**	0	13	0	11	*	*	*	*	*	*	*	*	0	13
02:30	0	18	0	12	0	12	*	*	*	*	*	*	*	*	0	14
02:45	0	8	0	13	0	14	*	*	*	*	*	*	*	*	0	12
03:00	0	4	0	10	0	8	*	*	*	*	*	*	*	*	0	7
03:15	0	14	0	12	0	10	*	*	*	*	*	*	*	*	0	12
03:30	0	10	0	10	0	7	*	*	*	*	*	*	*	*	0	9
03:45	0	14	0	10	0	8	*	*	*	*	*	*	*	*	0	11
04:00	0	8	0	14	0	14	*	*	*	*	*	*	*	*	0	12
04:15	0	11	0	20	0	16	*	*	*	*	*	*	*	*	0	16
04:30	7	16	6	15	8	16	*	*	*	*	*	*	*	*	7	16
04:45	12	14	9	13	8	18	*	*	*	*	*	*	*	*	10	15
05:00	10	4	5	28	4	30	*	*	*	*	*	*	*	*	6	21
05:15	7	11	14	20	9	26	*	*	*	*	*	*	*	*	10	19
05:30	10	14	20	36	15	44	*	*	*	*	*	*	*	*	15	31
05:45	22	5	20	37	18	40	*	*	*	*	*	*	*	*	20	27
06:00	13	9	16	**56**	20	41	*	*	*	*	*	*	*	*	16	**35**
06:15	14	7	12	**42**	20	40	*	*	*	*	*	*	*	*	15	**30**
06:30	0	20	0	**44**	2	40	*	*	*	*	*	*	*	*	1	**35**
06:45	0	16	0	**66**	0	55	*	*	*	*	*	*	*	*	0	**46**
07:00	0	4	0	44	1	45	*	*	*	*	*	*	*	*	0	31
07:15	0	4	1	14	2	16	*	*	*	*	*	*	*	*	1	11
07:30	0	4	0	3	1	13	*	*	*	*	*	*	*	*	0	7
07:45	1	4	0	4	1	4	*	*	*	*	*	*	*	*	1	4
08:00	0	5	0	6	3	1	*	*	*	*	*	*	*	*	1	4
08:15	0	4	1	2	0	2	*	*	*	*	*	*	*	*	0	3
08:30	0	3	0	2	2	8	*	*	*	*	*	*	*	*	1	4
08:45	0	4	0	4	2	4	*	*	*	*	*	*	*	*	1	4
09:00	2	4	1	4	0	8	*	*	*	*	*	*	*	*	1	5
09:15	1	3	0	3	1	4	*	*	*	*	*	*	*	*	1	3
09:30	**34**	3	**44**	4	30	4	*	*	*	*	*	*	*	*	**36**	4
09:45	**23**	3	**30**	4	24	11	*	*	*	*	*	*	*	*	**26**	6
10:00	**30**	0	**25**	6	24	7	*	*	*	*	*	*	*	*	**26**	4
10:15	**13**	0	**18**	14	19	6	*	*	*	*	*	*	*	*	**17**	7
10:30	17	2	17	10	16	4	*	*	*	*	*	*	*	*	17	5
10:45	15	4	9	7	16	9	*	*	*	*	*	*	*	*	13	7
11:00	8	0	12	0	**14**	0	*	*	*	*	*	*	*	*	11	0
11:15	10	2	12	2	**21**	2	*	*	*	*	*	*	*	*	14	2
11:30	6	0	6	0	**29**	2	*	*	*	*	*	*	*	*	14	1
11:45	6	0	12	0	**34**	0	*	*	*	*	*	*	*	*	17	0
Total	261	364	290	700	344	1065	0	0	0	0	0	0	0	0	298	710
Day Total	625		990		1409		0		0		0		0		1008	
% Splits	41.8 %	58.2 %	29.3 %	70.7 %	24.4 %	75.6 %	0.0%	0.0%	0.0%	0.0%	0.0%	0.0%	0.0%	0.0%	29.6 %	70.4%
Peak	09:30	01:30	09:30	06:00	11:00	00:15	-	-	-	-	-	-	-	-	09:30	06:00
Vol.	100	54	117	208	98	364	-	-	-	-	-	-	-	-	105	146
P.H.F.	0.735	0.750	0.665	0.788	0.721	0.758									0.729	0.760

ADT ADT 2,096 AADT 2,096

Connor Support Services, LLC

1804 View Top Court
Annapolis, MD 21409

Site Code: KEN SB

Station ID:

Start	02-Sep-13		Tue		Wed		Thu		Fri		Sat		Sun		Average Da	
Time	A.M.	P.M.	A.M.	P.M.	A.M.	P.M.	A.M.	P.M.	A.M.	P.M.	A.M.	P.M.	A.M.	P.M.	A.M.	P.M.
12:00	*	*	*	*	*	*	*	*	*	*	14	12	3	**33**	8	22
12:15	*	*	*	*	*	*	*	*	*	*	2	12	2	**50**	2	31
12:30	*	*	*	*	*	*	*	*	*	*	2	13	1	**72**	2	42
12:45	*	*	*	*	*	*	*	*	*	*	5	16	6	**24**	6	20
01:00	*	*	*	*	*	*	*	*	*	*	0	15	3	10	2	12
01:15	*	*	*	*	*	*	*	*	*	*	2	17	2	23	2	20
01:30	*	*	*	*	*	*	*	*	*	*	3	16	6	16	4	16
01:45	*	*	*	*	*	*	*	*	*	*	0	14	0	12	0	13
02:00	*	*	*	*	*	*	*	*	*	*	0	16	5	9	2	12
02:15	*	*	*	*	*	*	*	*	*	*	0	9	3	14	2	12
02:30	*	*	*	*	*	*	*	*	*	*	1	10	1	15	1	12
02:45	*	*	*	*	*	*	*	*	*	*	3	14	1	14	2	14
03:00	*	*	*	*	*	*	*	*	*	*	2	8	1	18	2	13
03:15	*	*	*	*	*	*	*	*	*	*	2	18	1	14	2	16
03:30	*	*	*	*	*	*	*	*	*	*	1	22	1	4	1	13
03:45	*	*	*	*	*	*	*	*	*	*	2	17	1	12	2	14
04:00	*	*	*	*	*	*	*	*	*	*	1	16	1	26	1	21
04:15	*	*	*	*	*	*	*	*	*	*	0	25	0	14	0	20
04:30	*	*	*	*	*	*	*	*	*	*	1	18	2	16	2	17
04:45	*	*	*	*	*	*	*	*	*	*	0	24	1	15	0	20
05:00	*	*	*	*	*	*	*	*	*	*	0	20	0	20	0	20
05:15	*	*	*	*	*	*	*	*	*	*	1	24	1	26	1	25
05:30	*	*	*	*	*	*	*	*	*	*	4	42	6	14	5	**28**
05:45	*	*	*	*	*	*	*	*	*	*	2	46	0	24	1	**35**
06:00	*	*	*	*	*	*	*	*	*	*	2	42	6	22	4	**32**
06:15	*	*	*	*	*	*	*	*	*	*	2	36	4	19	3	**28**
06:30	*	*	*	*	*	*	*	*	*	*	4	**34**	9	14	6	24
06:45	*	*	*	*	*	*	*	*	*	*	7	**52**	9	4	8	28
07:00	*	*	*	*	*	*	*	*	*	*	4	**52**	8	15	6	34
07:15	*	*	*	*	*	*	*	*	*	*	3	**46**	3	16	3	31
07:30	*	*	*	*	*	*	*	*	*	*	4	15	3	9	4	12
07:45	*	*	*	*	*	*	*	*	*	*	4	24	8	14	6	19
08:00	*	*	*	*	*	*	*	*	*	*	4	18	3	10	4	14
08:15	*	*	*	*	*	*	*	*	*	*	2	14	10	14	6	14
08:30	*	*	*	*	*	*	*	*	*	*	4	40	9	12	6	26
08:45	*	*	*	*	*	*	*	*	*	*	2	21	8	7	5	14
09:00	*	*	*	*	*	*	*	*	*	*	6	20	6	14	6	17
09:15	*	*	*	*	*	*	*	*	*	*	2	14	18	9	10	12
09:30	*	*	*	*	*	*	*	*	*	*	13	18	12	10	12	14
09:45	*	*	*	*	*	*	*	*	*	*	**21**	14	26	12	**24**	13
10:00	*	*	*	*	*	*	*	*	*	*	**22**	20	22	12	**22**	16
10:15	*	*	*	*	*	*	*	*	*	*	**26**	12	17	6	**22**	9
10:30	*	*	*	*	*	*	*	*	*	*	**14**	13	18	10	**16**	12
10:45	*	*	*	*	*	*	*	*	*	*	12	13	23	8	18	10
11:00	*	*	*	*	*	*	*	*	*	*	5	11	**29**	3	17	7
11:15	*	*	*	*	*	*	*	*	*	*	14	7	**18**	4	16	6
11:30	*	*	*	*	*	*	*	*	*	*	8	6	**44**	4	26	5
11:45	*	*	*	*	*	*	*	*	*	*	10	6	**36**	3	23	4
Total	0	0	0	0	0	0	0	0	0	0	243	992	397	746	323	869
Day Total	0		0		0		0		0		1235		1143		1192	
% Splits	0.0%	0.0%	0.0%	0.0%	0.0%	0.0%	0.0%	0.0%	0.0%	0.0%	19.7 %	80.3 %	34.7 %	65.3 %	27.1 %	72.9%
Peak	-	-	-	-	-	-	-	-	-	-	09:45	06:30	11:00	12:00	09:45	05:30
Vol.	-	-	-	-	-	-	-	-	-	-	83	184	127	179	84	123
P.H.F.											0.798	0.885	0.722	0.622	0.875	0.879

Connor Support Services, LLC

1804 View Top Court
Annapolis, MD 21409

Site Code: KEN SB

Station ID:

Start	09-Sep-13		Tue		Wed		Thu		Fri		Sat		Sun		Average Da	
Time	A.M.	P.M.	A.M.	P.M.	A.M.	P.M.	A.M.	P.M.	A.M.	P.M.	A.M.	P.M.	A.M.	P.M.	A.M.	P.M.
12:00	2	18	1	10	4	20	1	12	4	10	*	*	*	*	2	14
12:15	1	15	3	9	4	10	2	18	4	14	*	*	*	*	3	13
12:30	1	10	1	22	1	17	2	14	0	18	*	*	*	*	1	16
12:45	0	12	1	12	1	18	1	20	4	16	*	*	*	*	1	16
01:00	0	12	0	21	0	15	1	12	0	20	*	*	*	*	0	16
01:15	0	16	3	15	2	12	4	21	3	15	*	*	*	*	2	16
01:30	2	8	0	12	0	**18**	0	8	0	15	*	*	*	*	0	12
01:45	0	15	0	18	0	**16**	1	15	1	22	*	*	*	*	0	17
02:00	1	14	0	22	0	**16**	1	13	2	7	*	*	*	*	1	14
02:15	0	20	0	18	1	**18**	0	19	0	10	*	*	*	*	0	17
02:30	1	21	0	6	2	18	0	8	1	16	*	*	*	*	1	14
02:45	0	10	0	20	0	15	0	14	2	12	*	*	*	*	0	14
03:00	0	8	0	16	0	12	0	24	0	12	*	*	*	*	0	14
03:15	0	14	0	18	2	11	0	16	0	12	*	*	*	*	0	14
03:30	0	10	0	12	0	16	0	22	0	18	*	*	*	*	0	16
03:45	1	18	2	14	0	8	0	12	0	17	*	*	*	*	1	14
04:00	2	13	0	10	0	11	0	26	0	12	*	*	*	*	0	14
04:15	2	13	2	6	1	12	1	22	0	12	*	*	*	*	1	13
04:30	0	**14**	1	11	2	8	3	30	3	18	*	*	*	*	2	16
04:45	2	**21**	4	12	2	12	2	32	1	12	*	*	*	*	2	18
05:00	5	**17**	2	16	4	12	4	34	5	15	*	*	*	*	4	19
05:15	16	**22**	16	20	16	18	17	58	20	18	*	*	*	*	17	27
05:30	22	12	22	25	26	15	22	42	22	22	*	*	*	*	23	23
05:45	26	10	26	30	22	15	22	39	24	22	*	*	*	*	24	23
06:00	21	18	16	36	21	14	21	28	16	24	*	*	*	*	19	24
06:15	20	19	20	31	18	17	20	34	16	11	*	*	*	*	19	22
06:30	22	17	28	**38**	27	16	22	38	26	28	*	*	*	*	25	27
06:45	32	6	45	**46**	49	10	44	**38**	34	28	*	*	*	*	41	**26**
07:00	34	9	27	**53**	32	8	36	**46**	40	**34**	*	*	*	*	34	**30**
07:15	30	15	41	**32**	42	19	46	**39**	36	**54**	*	*	*	*	39	**32**
07:30	48	7	40	26	44	20	44	**52**	37	**77**	*	*	*	*	43	**36**
07:45	35	4	54	14	42	10	47	32	50	**40**	*	*	*	*	46	20
08:00	52	8	46	15	44	3	46	10	34	16	*	*	*	*	44	10
08:15	**48**	6	42	10	44	6	**42**	11	**51**	9	*	*	*	*	**45**	8
08:30	**48**	6	47	7	**51**	10	**58**	13	**62**	18	*	*	*	*	**53**	11
08:45	**56**	10	**54**	17	**50**	18	**60**	18	**59**	10	*	*	*	*	**56**	15
09:00	**53**	11	**57**	9	**49**	10	**56**	21	**62**	13	*	*	*	*	**55**	13
09:15	26	4	**44**	24	**50**	10	36	18	47	18	*	*	*	*	41	15
09:30	37	12	**55**	20	36	16	27	20	35	23	*	*	*	*	38	18
09:45	24	16	36	17	41	14	29	19	33	29	*	*	*	*	33	19
10:00	19	13	32	20	19	23	16	40	20	17	*	*	*	*	21	23
10:15	17	8	34	26	25	10	17	11	10	11	*	*	*	*	21	13
10:30	21	12	12	12	20	6	14	13	12	8	*	*	*	*	16	10
10:45	10	4	14	21	12	7	12	36	16	14	*	*	*	*	13	16
11:00	16	4	18	14	14	5	10	10	20	6	*	*	*	*	16	8
11:15	9	4	13	4	12	7	14	5	14	10	*	*	*	*	12	6
11:30	16	4	18	6	16	4	21	3	18	5	*	*	*	*	18	4
11:45	6	2	10	4	16	6	16	4	18	4	*	*	*	*	13	4
Total	784	562	887	877	864	612	838	1090	862	872	0	0	0	0	846	800
Day Total	1346		1764		1476		1928		1734		0		0		1646	
% Splits	58.2 %	41.8 %	50.3 %	49.7 %	58.5 %	41.5 %	43.5 %	56.5 %	49.7 %	50.3 %	0.0%	0.0%	0.0%	0.0%	51.4 %	48.6%
Peak	08:15	04:30	08:45	06:30	08:30	01:30	08:15	06:45	08:15	07:00	-	-	-	-	08:15	06:45
Vol.	205	74	210	169	200	68	216	175	234	205	-	-	-	-	209	124
P.H.F.	0.915	0.841	0.921	0.797	0.980	0.944	0.900	0.754	0.944	0.666					0.933	0.861

ADT ADT 1,514 AADT 1,514

Appendix B
AADT Growth Data

2006 Traffic Volumes

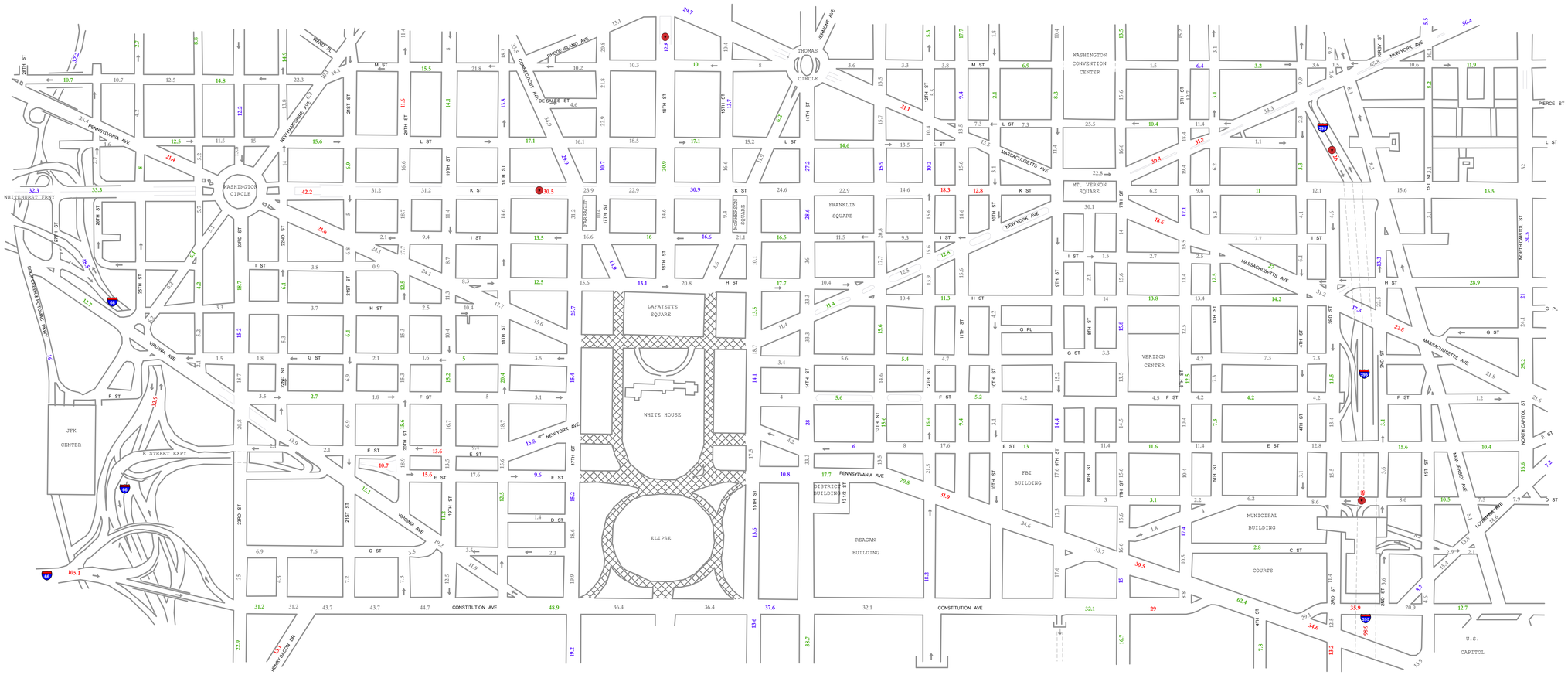

District Department of Transportation
Washington, D.C.

Legend

- **12.6** 2006 HPMS Volumes Counted in 2006
- **12.6** 2006 HPMS Volumes Factored from a Previous Year
- **12.6** Volumes from 2002 Map - Factored to 2006 AAWT - to be Counted in 2008
- **12.6** Volumes from 2002 Map - Factored to 2006 AAWT
- ● Permanent Counting Station Locations (Under Construction)

Average Annual Weekday Volumes, expressed in thousands, rounded to the nearest 100

Scale 1:4,944

0 0.04 0.08 0.16 0.24 0.32 0.4 Miles

The base map was compiled from aerial photography and airborne GPS data acquired in March and April 1999.
All mapping is referenced to the Maryland State Plane Coordinate System 1983 North American horizontal datum and 1988 vertical datum in meters.

Data Source	DDOT
Map Type :	Standard
Serial No. :	000000
Date Created :	June 2008
Expiration Date :	Unknown
Created By :	DDOT GIS

Disclaimer

The information contained on this page is NOT to be construed or used as a "legal description". District Department of Transportation (DDOT) does not provide any guaranty of accuracy or completeness regarding the map information. Any errors or omissions should be reported to the DDOT Geographic Data Systems Division of the Office of Information Technology & Innovations Administration.
In no event will DDOT be liable for any damages, including but not limited to loss of data, lost profits, business interruption, loss of business information or any other pecuniary loss that might arise from the use of this map or information it contains.

N W E S

Government of the District of Columbia
Adrian M. Fenty, Mayor

District Department of Transportation
Emeka C. Moneme, Director

Office of Information Technology and Innovations
Geographic Data Systems Division
District Department of Transportation

2007 Traffic Volumes

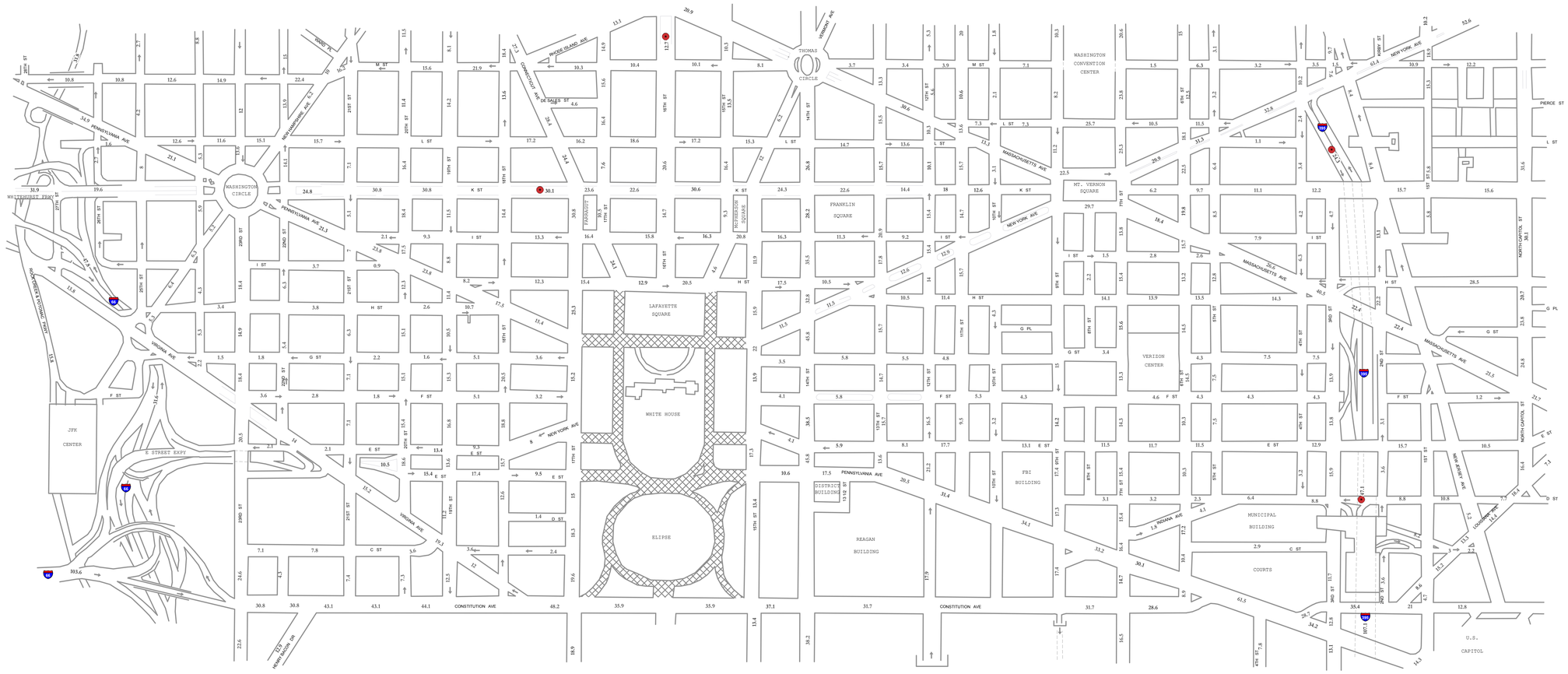

District Department of Transportation
Washington, D.C.

Scale 1:4,569

0 0.05 0.1 0.2 0.3 0.4 0.5 Miles

The base map was compiled from aerial photography and airborne GPS data acquired in March and April 1999.
All mapping is referenced to the Maryland State Plane Coordinate System 1983 North American horizontal datum and 1988 vertical datum in meters.

Data Source	DDOT
Map Type :	Planning
Serial No. :	000000
Date Created :	December 5, 2008
Expiration Date :	Unknown
Created By :	DDOT GIS

Disclaimer

The information contained on this page is NOT to be construed or used as a "legal description". District Department of Transportation (DDOT) does not provide any guaranty of accuracy or completeness regarding the map information. Any errors or omissions should be reported to the DDOT Geographic Data Systems Division of the Office of Information Technology & Innovations Administration.
In no event will DDOT be liable for any damages, including but not limited to loss of data, lost profits, business interruption, loss of business information or any other pecuniary loss that might arise from the use of this map or information it contains.

N W E S

Government of the District of Columbia
Adrian M. Fenty, Mayor

District Department of Transportation
Frank Seales, Acting Director

Office of Information Technology and Innovations
Geographic Data Systems Division
District Department of Transportation

N W E S

Legend

12.6 Average Annual Weekday Volumes, expressed in thousands, rounded to the nearest 100

Permanent Counting Station Locations

October 2008

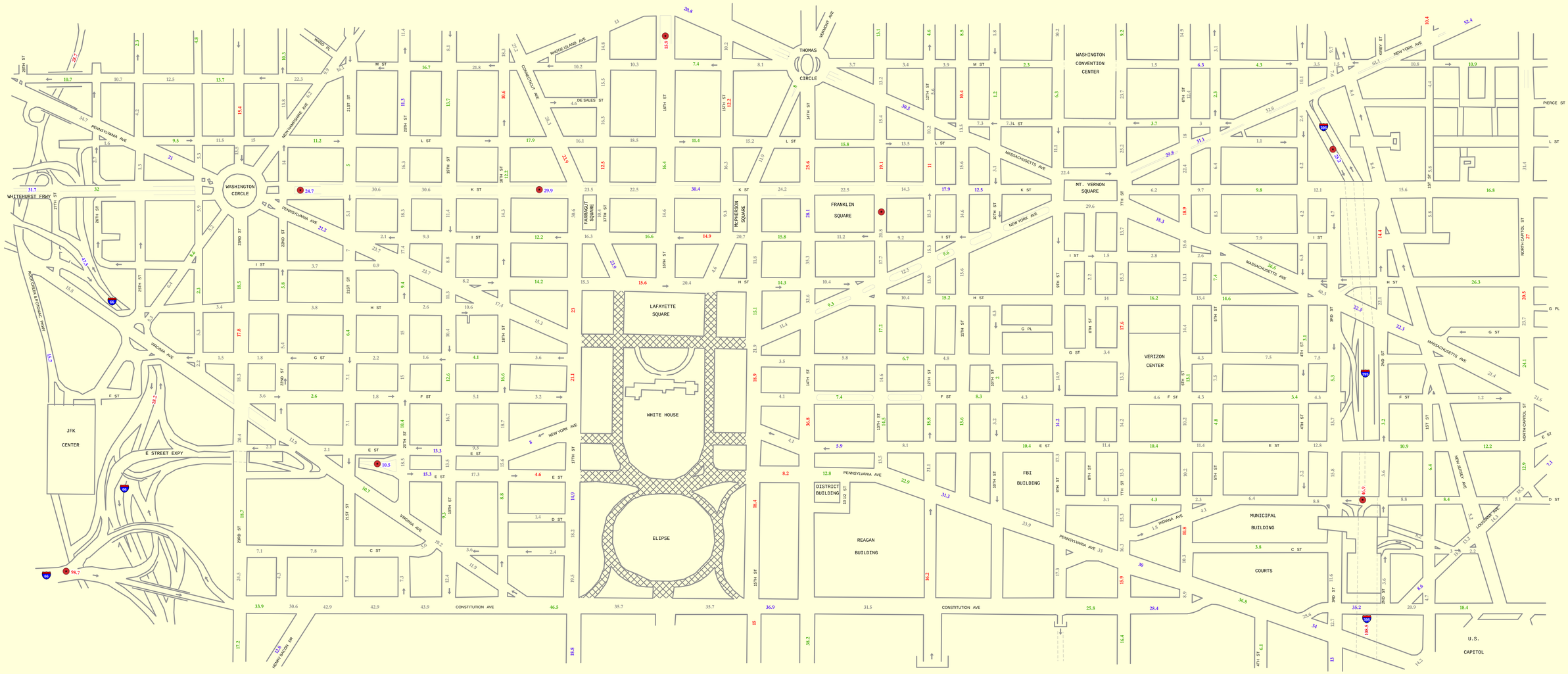

Legend

- 12.6 2008 HPMS Volumes Counted in 2008
- 12.6 2008 HPMS Volumes Factored from a Previous Year
- 12.6 Supplemental Volumes - Counted in 2008
- 12.6 Historical Volumes - Factored to 2008
- Permanent Counting Station Locations

Average Annual Weekday Volumes, expressed in thousands, rounded to the nearest 100

2008 Traffic Volumes

District Department of Transportation

Washington, D.C.

District Department of Transportation

October 2009

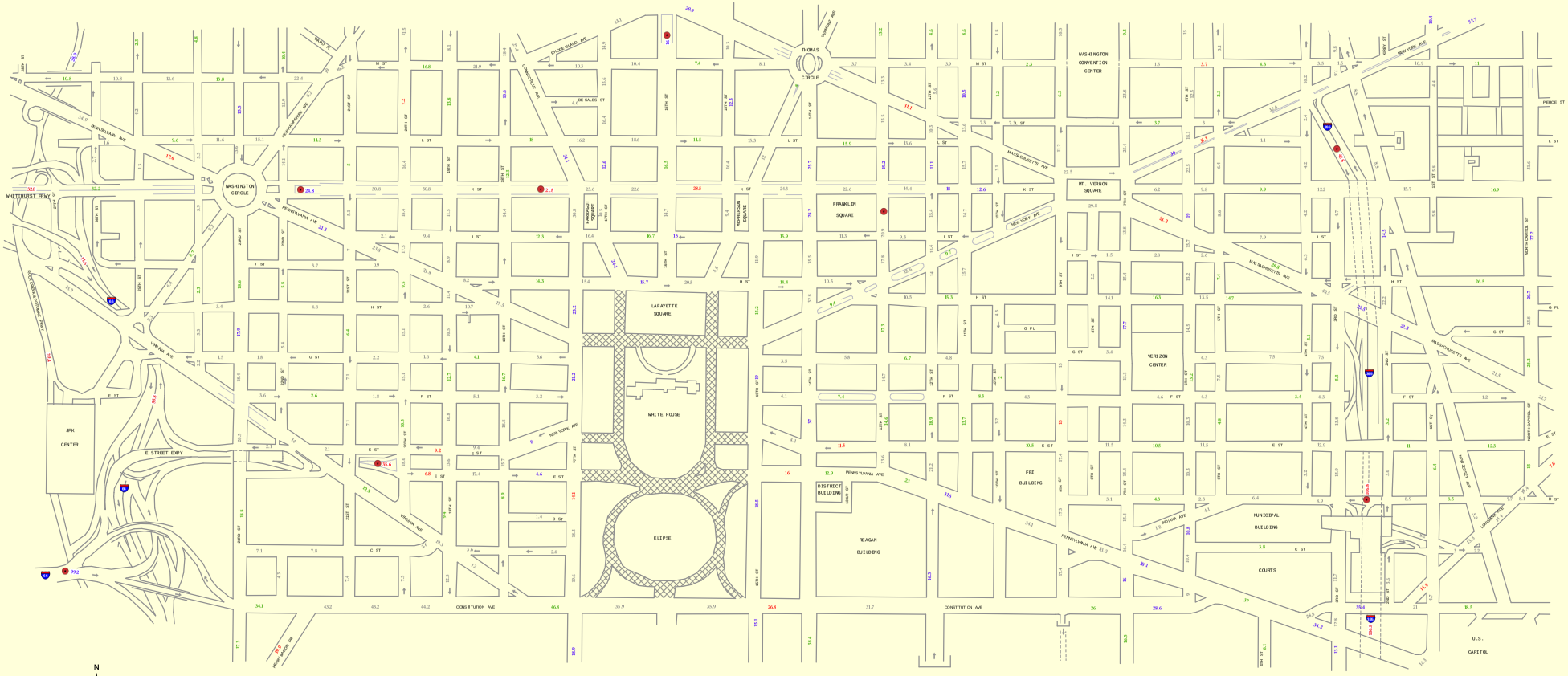

N
W E
S

Legend

- 12.6 2009 HPMS Volumes Counted in 2009
- 12.6 2009 HPMS Volumes Factored from a Previous Year
- 12.6 Supplemental Volumes - Counted in 2008 - Factored to 2009
- 12.6 Historical Volumes - Factored to 2009
- Permanent Counting Station Locations *

Average Annual Daily Volumes, expressed in thousands, rounded to the nearest 100

* Permanent counting stations are currently undergoing a redesign, some volumes reported at permanent counting station locations are based on factored short-term counts.

2009 Traffic Volumes

District Department of Transportation

Washington, D.C.

District Department of Transportation

February 2011

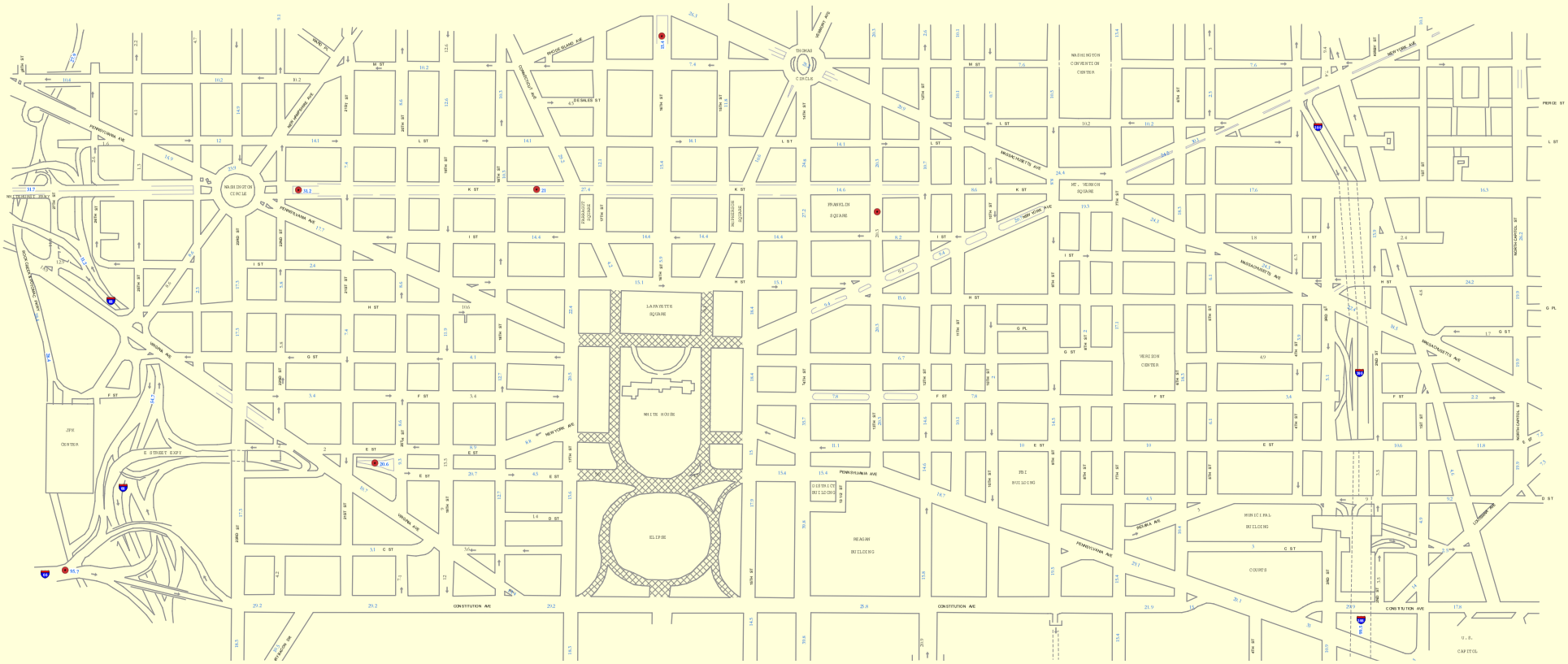

N
W E
S

Legend

- **12.6** 2010 Volume Estimate
- 12.6 Historical Volume Estimate - Factored to 2010
- Permanent Counting Station Locations *

Average Annual Daily Volumes, expressed in thousands, rounded to the nearest 100

* Permanent counting stations are currently undergoing a redesign, some volumes reported at permanent counting station locations are based on factored short-term counts.

2010 Traffic Volumes

District Department of Transportation

Washington, D.C.

District Department of Transportation

March 2012

Appendix C
Analysis Worksheets

Maryland State Highway Administration
Turning Movement Summary and
Level of Service

Count Date: 9/11/2013
Conditions: Existing
Design Year: 2013

Location: 25th St at New Hampshire Ave, NW, DC

Computed By: LL Date: 11/6/13

SHA Method

Morning Peak Hour 8:30-9:30 am

Lane Configuration

Evening Peak Hour 6:00-7:00 pm

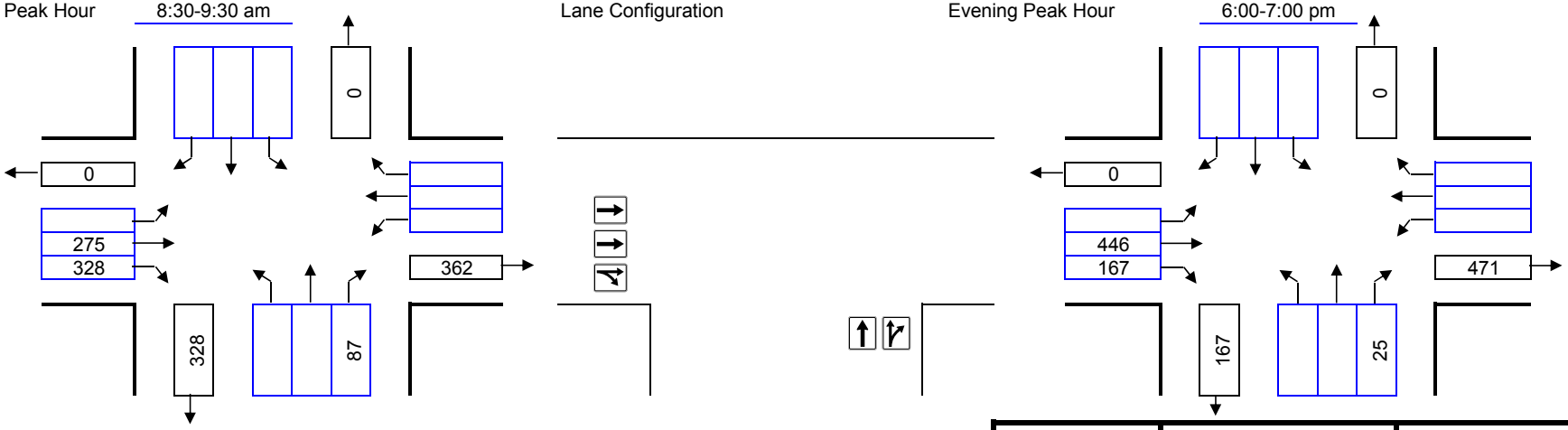

Right Turns Subtracted for Exclusive Right Turn Overlap Phasing or Right Turn on Red:

NB Approach:	New Hampshire Ave, NW	AM	NB	PM	NB
SB Approach:	New Hampshire Ave, NW		SB		SB
EB Approach:	F St, NW		EB		EB
WB Approach:	F St, NW		WB		WB

Number of Lanes	Lane Use Factor	Service Level		Critical Lane Volume	Opposing Volume (vph)		PCE
1 =	1.00	A	≤	1000	≤	199	1.1
2 =	0.55	B	≤	1150	≤	599	2.0
3 =	0.40	C	≤	1300	≤	799	3.0
4 =	0.30	D	≤	1450	≤	999	4.0
Dbl-left	0.60	E	≤	1600	≥	1000	5.0
		F	>	1600			

Movement	Volume	PCE	Lane Use Factor	Lane Volume	Opposing Lefts	Critical Lane Volume	*
NBR	87	1.00	1.00	87	0	87	*
EBR	328	1.00	1.00	328	0	328	*
					Critical Volume	415	A
					V/C	0.26	

De facto RT lane(s) assumed for NB and EB approaches.

Movement	Volume	PCE	Lane Use Factor	Lane Volume	Opposing Lefts	Critical Lane Volume	*
NBR	25	1.00	1.00	25	0	25	*
EBTR	613	1.00	0.40	245	0	245	*
					Critical Volume	270	A
					V/C	0.17	

De facto RT lane(s) assumed for NB approach.

Maryland State Highway Administration
Turning Movement Summary and
Level of Service

Count Date: 9/10/2013
Conditions: Existing
Design Year: 2013

Location: F St at 25th St, NW, DC

Computed By: LL

Date: 11/6/13

SHA Method

Morning Peak Hour 8:30-9:30 am

Lane Configuration

Evening Peak Hour 5:45-6:45 pm

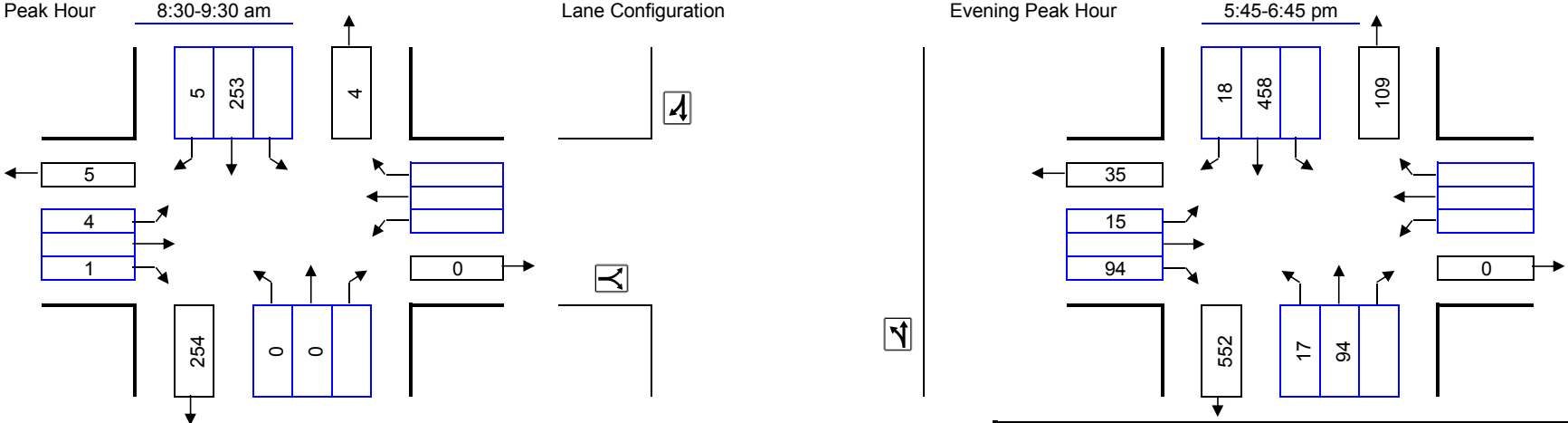

Right Turns Subtracted for Exclusive Right Turn Overlap Phasing or Right Turn on Red:

		AM		PM	
NB Approach:	25th St, NW	NB		NB	
SB Approach:	25th St, NW	SB		SB	
EB Approach:	F St, NW	EB		EB	
WB Approach:		WB		WB	

Number of Lanes	Lane Use Factor	Service Level		Critical Lane Volume	Opposing Volume (vph)		PCE
1 =	1.00	A	≤	1000	≤	199	1.1
2 =	0.55	B	≤	1150	≤	599	2.0
3 =	0.40	C	≤	1300	≤	799	3.0
4 =	0.30	D	≤	1450	≤	999	4.0
Dbl-left	0.60	E	≤	1600	≥	1000	5.0
		F	>	1600			

Movement	Volume	PCE	Lane Use Factor	Lane Volume	Opposing Lefts	Critical Lane Volume	*
SBTR	258	1.00	1.00	258	0	258	*
EBLR	5	1.00	1.00	5	0	5	*
					Critical Volume	263	A
					V/C	0.16	

Movement	Volume	PCE	Lane Use Factor	Lane Volume	Opposing Lefts	Critical Lane Volume	*
NBLT	111	2.00	1.00	128	0	128	
SBTR + NBL	476	1.00	1.00	476	17	493	*
EBLR	109	1.00	1.00	109	0	109	*
					Critical Volume	602	A
					V/C	0.38	

Maryland State Highway Administration
Turning Movement Summary and
Level of Service

Count Date: 9/11/2013
Conditions: Existing
Design Year: 2013

Location: F St at New Hampshire Ave, NW, DC

Computed By: LL Date: 11/6/13

SHA Method

Morning Peak Hour 8:30-9:30 am

Lane Configuration

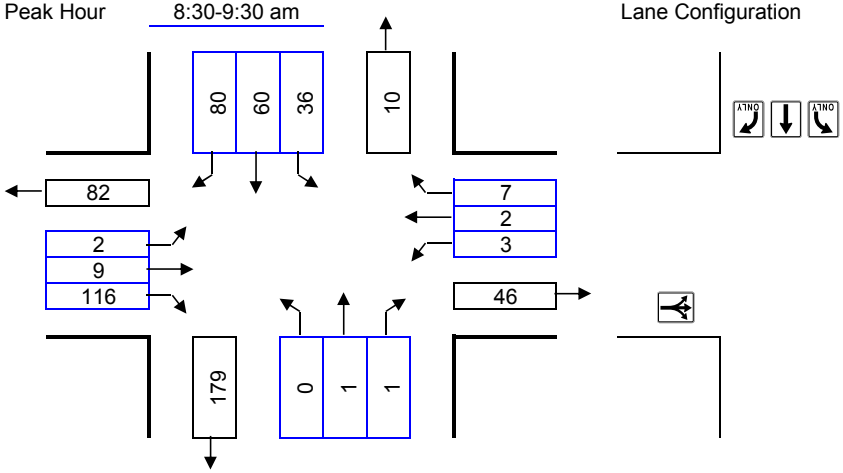

Evening Peak Hour 5:45-6:45 pm

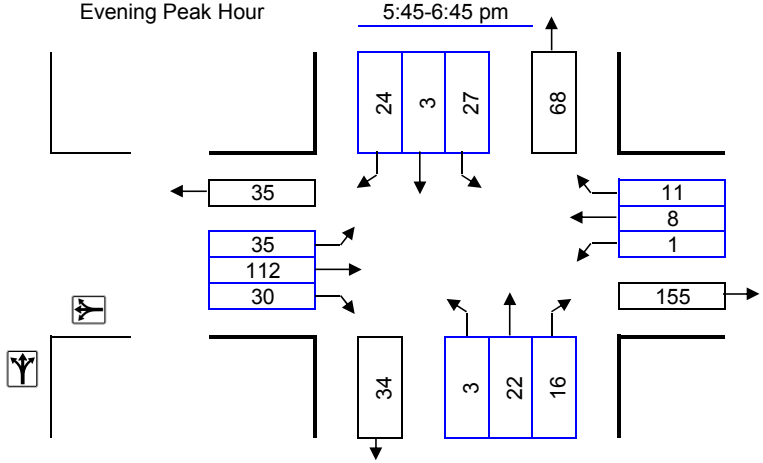

Right Turns Subtracted for Exclusive Right Turn Overlap Phasing or Right Turn on Red:

NB Approach:	New Hampshire Ave, NW	AM	NB	PM	NB
SB Approach:	New Hampshire Ave, NW		SB		SB
EB Approach:	F St, NW		EB		EB
WB Approach:	F St, NW		WB		WB

Number of Lanes	Lane Use Factor	Service Level		Critical Lane Volume	Opposing Volume (vph)		PCE
1 =	1.00	A	≤	1000	≤	199	1.1
2 =	0.55	B	≤	1150	≤	599	2.0
3 =	0.40	C	≤	1300	≤	799	3.0
4 =	0.30	D	≤	1450	≤	999	4.0
Dbl-left	0.60	E	≤	1600	≥	1000	5.0
		F	>	1600			

Movement	Volume	PCE	Lane Use Factor	Lane Volume	Opposing Lefts	Critical Lane Volume	*
NBTR + SBL	2	1.10	1.00	2	36	38	
SBR	80	1.00	1.00	80	0	80	*
EBLTR + WBL	127	1.10	1.00	127	3	130	*
WBLTR + EBL	12	1.10	1.00	12	2	14	
					Critical Volume	210	A
					V/C	0.13	

Movement	Volume	PCE	Lane Use Factor	Lane Volume	Opposing Lefts	Critical Lane Volume	*
NBLTR + SBL	41	1.10	1.00	41	27	68	*
SBR + NBL	24	1.00	1.00	24	3	27	
EBLTR + WBL	177	1.10	1.00	181	1	182	*
WBLTR + EBL	20	1.10	1.00	20	35	55	
					Critical Volume	250	A
					V/C	0.16	

Maryland State Highway Administration
Turning Movement Summary and
Level of Service

Count Date: 9/11/2013
Conditions: Existing
Design Year: 2013

Location: F St at Rock Creek and Potomac Pkwy, NW, DC

Computed By: LL Date: 11/6/13

SHA Method

Morning Peak Hour 7:00-8:00 am

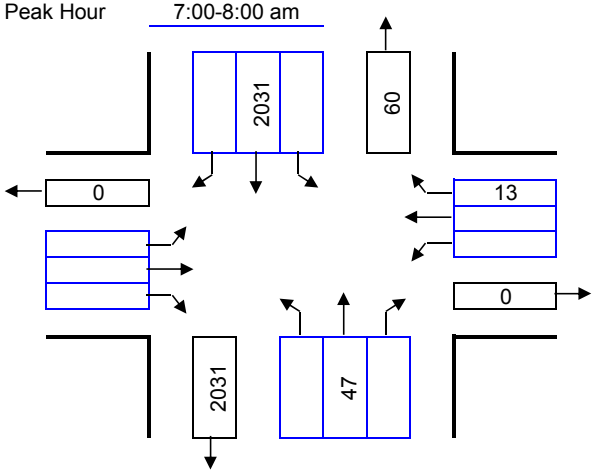

Lane Configuration

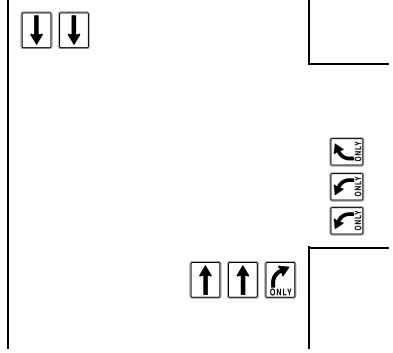

Evening Peak Hour 5:00-6:00 pm

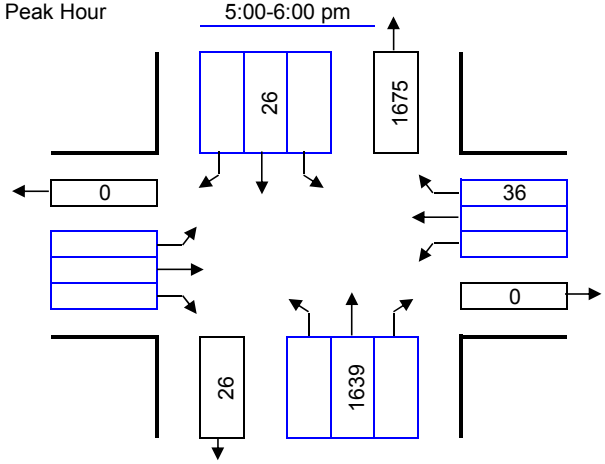

Right Turns Subtracted for Exclusive Right Turn Overlap Phasing or Right Turn on Red:

		AM			PM		
NB Approach:	Rock Creek and Potomac Pkwy	NB			NB		
SB Approach:	Rock Creek and Potomac Pkwy	SB			SB		
EB Approach:		EB			EB		
WB Approach:	F St, NW	WB	13		WB	36	

Number of Lanes	Lane Use Factor	Service Level		Critical Lane Volume	Opposing Volume (vph)		PCE
1 =	1.00	A	≤	1000	≤	199	1.1
2 =	0.55	B	≤	1150	≤	599	2.0
3 =	0.40	C	≤	1300	≤	799	3.0
4 =	0.30	D	≤	1450	≤	999	4.0
Dbl-left	0.60	E	≤	1600	≥	1000	5.0
		F	>	1600			

Movement	Volume	PCE	Lane Use Factor	Lane Volume	Opposing Lefts	Critical Lane Volume	*
NBT	47	1.00	0.55	26	0	26	
SBT	2031	1.00	0.55	1117	0	1117	*
WBR	0	1.00	1.00	0	0	0	
					Critical Volume	1117	B
					V/C	0.70	

Movement	Volume	PCE	Lane Use Factor	Lane Volume	Opposing Lefts	Critical Lane Volume	*
NBT	1639	1.00	0.55	901	0	901	*
SBT	26	1.00	0.55	14	0	14	
WBR	0	1.00	1.00	0	0	0	
					Critical Volume	901	A
					V/C	0.56	

Maryland State Highway Administration
Turning Movement Summary and
Level of Service

Count Date: 9/11/2013
Conditions: Background
Design Year: 2013

Location: 25th St at New Hampshire Ave, NW, DC

Computed By: LL Date: 11/6/13

SHA Method

Morning Peak Hour 8:30-9:30 am

Lane Configuration

Evening Peak Hour 6:00-7:00 pm

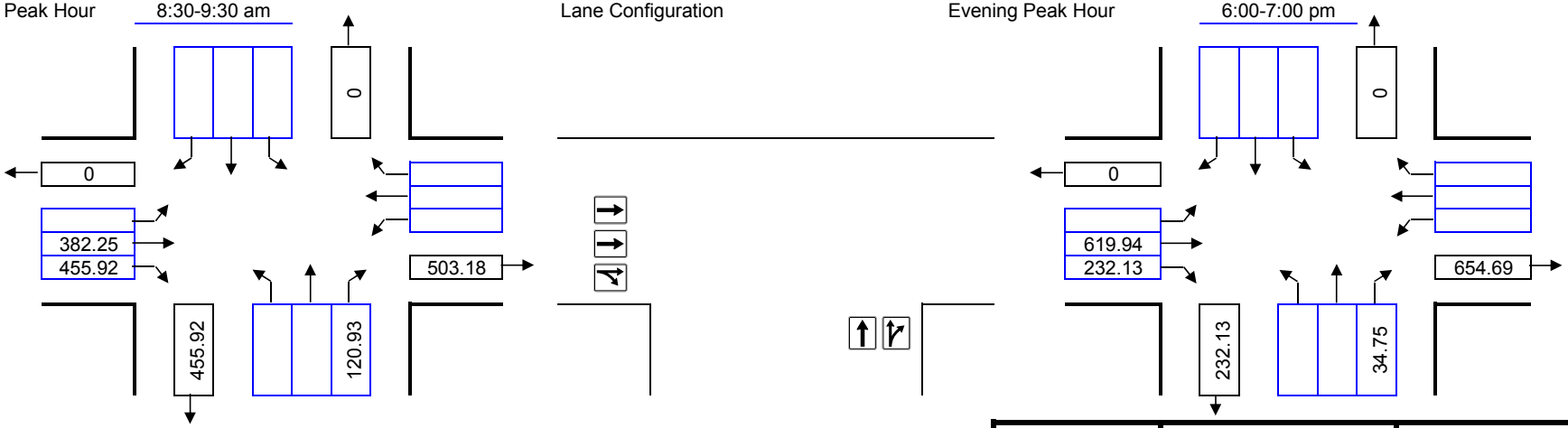

Right Turns Subtracted for Exclusive Right Turn Overlap Phasing or Right Turn on Red:

		AM		PM	
NB Approach:	New Hampshire Ave, NW	NB		NB	
SB Approach:	New Hampshire Ave, NW	SB		SB	
EB Approach:	F St, NW	EB		EB	
WB Approach:	F St, NW	WB		WB	

Number of Lanes	Lane Use Factor	Service Level		Critical Lane Volume	Opposing Volume (vph)		PCE
1 =	1.00	A	≤	1000	≤	199	1.1
2 =	0.55	B	≤	1150	≤	599	2.0
3 =	0.40	C	≤	1300	≤	799	3.0
4 =	0.30	D	≤	1450	≤	999	4.0
Dbl-left	0.60	E	≤	1600	≥	1000	5.0
		F	>	1600			

Movement	Volume	PCE	Lane Use Factor	Lane Volume	Opposing Lefts	Critical Lane Volume	*
NBR	120.93	1.00	1.00	121	0	121	*
EBR	455.92	1.00	1.00	456	0	456	*
					Critical Volume	577	A
					V/C	0.36	

De facto RT lane(s) assumed for NB and EB approaches.

Movement	Volume	PCE	Lane Use Factor	Lane Volume	Opposing Lefts	Critical Lane Volume	*
NBR	34.75	1.00	1.00	35	0	35	*
EBTR	852.07	1.00	0.40	341	0	341	*
					Critical Volume	376	A
					V/C	0.24	

De facto RT lane(s) assumed for NB approach.

Maryland State Highway Administration
Turning Movement Summary and
Level of Service

Count Date: 9/10/2013
Conditions: Background
Design Year: 2013

Location: F St at 25th St, NW, DC
Computed By: LL
Date: 11/6/13

SHA Method

Morning Peak Hour 8:30-9:30 am

Lane Configuration

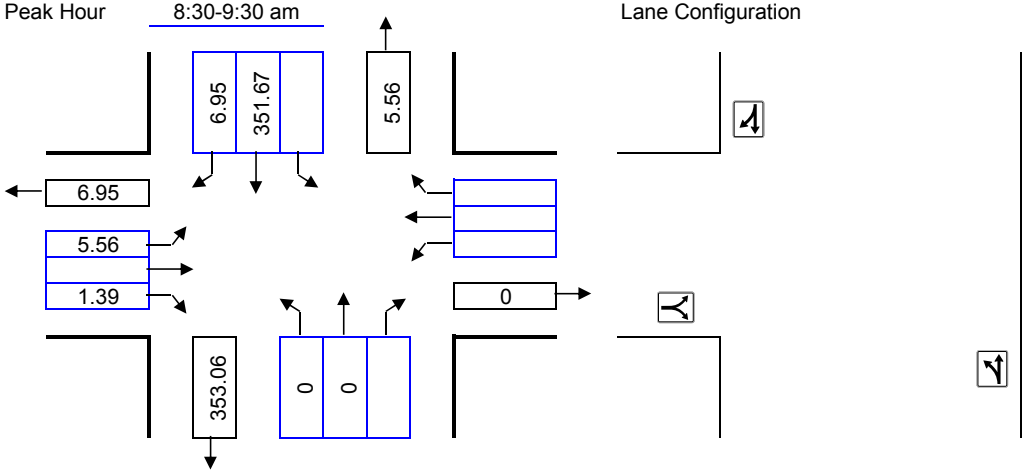

Evening Peak Hour 5:45-6:45 pm

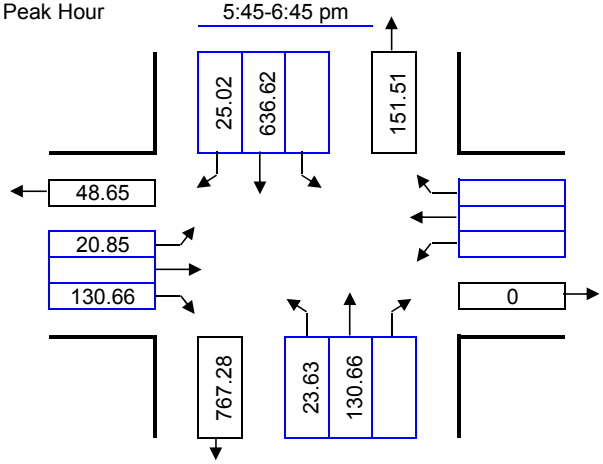

Right Turns Subtracted for Exclusive Right Turn Overlap Phasing or Right Turn on Red:

		AM		PM	
NB Approach:	25th St, NW	NB		NB	
SB Approach:	25th St, NW	SB		SB	
EB Approach:	F St, NW	EB		EB	
WB Approach:		WB		WB	

Number of Lanes	Lane Use Factor	Service Level		Critical Lane Volume	Opposing Volume (vph)		PCE
1 =	1.00	A	≤	1000	≤	199	1.1
2 =	0.55	B	≤	1150	≤	599	2.0
3 =	0.40	C	≤	1300	≤	799	3.0
4 =	0.30	D	≤	1450	≤	999	4.0
Dbl-left	0.60	E	≤	1600	≥	1000	5.0
		F	>	1600			

Movement	Volume	PCE	Lane Use Factor	Lane Volume	Opposing Lefts	Critical Lane Volume	*
SBTR	358.62	1.00	1.00	359	0	359	*
EBLR	6.95	1.00	1.00	7	0	7	*
					Critical Volume	366	A
					V/C	0.23	

Movement	Volume	PCE	Lane Use Factor	Lane Volume	Opposing Lefts	Critical Lane Volume	*
NBLT	154.29	3.00	1.00	202	0	202	
SBTR + NBL	661.64	1.00	1.00	662	23.63	686	*
EBLR	151.51	1.00	1.00	152	0	152	*
					Critical Volume	838	A
					V/C	0.52	

Maryland State Highway Administration
Turning Movement Summary and
Level of Service

Count Date: 9/11/2013
Conditions: Background
Design Year: 2013

Location: F St at New Hampshire Ave, NW, DC
Computed By: LL
Date: 11/6/13

SHA Method

Morning Peak Hour 8:30-9:30 am

Lane Configuration

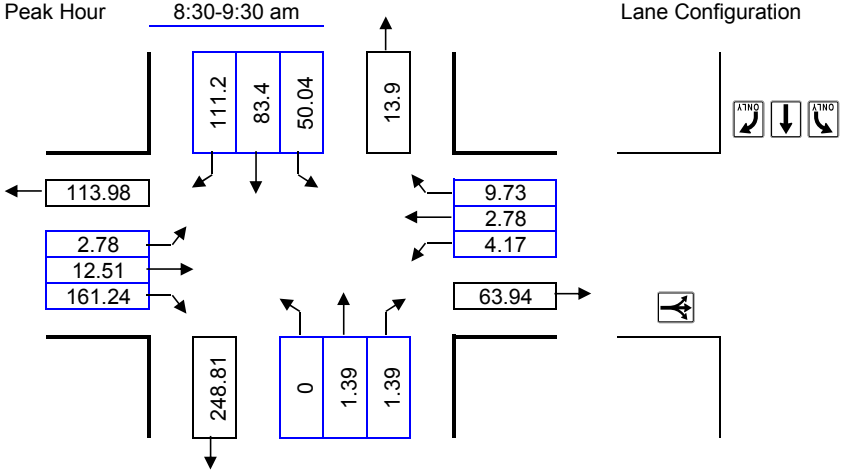

Evening Peak Hour 5:45-6:45 pm

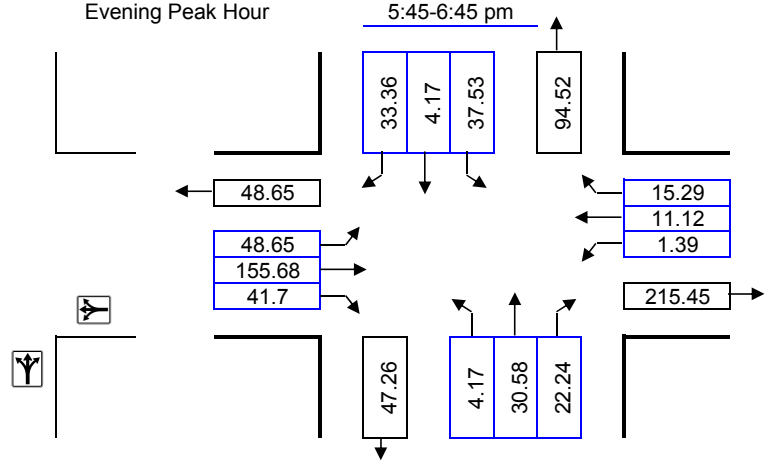

Right Turns Subtracted for Exclusive Right Turn Overlap Phasing or Right Turn on Red:

		AM		PM	
NB Approach:	New Hampshire Ave, NW	NB		NB	
SB Approach:	New Hampshire Ave, NW	SB		SB	
EB Approach:	F St, NW	EB		EB	
WB Approach:	F St, NW	WB		WB	

Number of Lanes	Lane Use Factor	Service Level		Critical Lane Volume	Opposing Volume (vph)		PCE
1 =	1.00	A	≤	1000	≤	199	1.1
2 =	0.55	B	≤	1150	≤	599	2.0
3 =	0.40	C	≤	1300	≤	799	3.0
4 =	0.30	D	≤	1450	≤	999	4.0
Dbl-left	0.60	E	≤	1600	≥	1000	5.0
		F	>	1600			

Movement	Volume	PCE	Lane Use Factor	Lane Volume	Opposing Lefts	Critical Lane Volume	*
NBTR + SBL	2.78	1.10	1.00	3	50	53	
SBR	111.2	1.00	1.00	111	0	111	*
EBLTR + WBL	176.53	1.10	1.00	177	4	181	*
WBLTR + EBL	16.68	1.10	1.00	17	3	20	
					Critical Volume	292	A
					V/C	0.18	

Movement	Volume	PCE	Lane Use Factor	Lane Volume	Opposing Lefts	Critical Lane Volume	*
NBLTR + SBL	56.99	1.10	1.00	57	37.53	95	*
SBR + NBL	33.36	1.00	1.00	33	4.17	37	
EBLTR + WBL	246.03	1.10	1.00	251	1.39	252	*
WBLTR + EBL	27.8	1.10	1.00	28	48.65	77	
					Critical Volume	347	A
					V/C	0.22	

Maryland State Highway Administration
Turning Movement Summary and
Level of Service

Count Date: 9/11/2013
Conditions: Background
Design Year: 2013

Location: F St at Rock Creek and Potomac Pkwy, NW, DC

Computed By: LL Date: 11/6/13

SHA Method

Morning Peak Hour 7:00-8:00 am

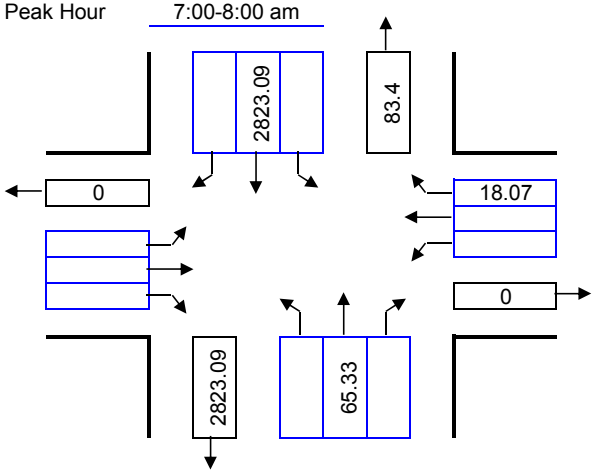

Lane Configuration

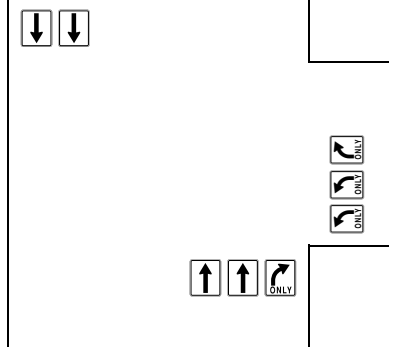

Evening Peak Hour 5:00-6:00 pm

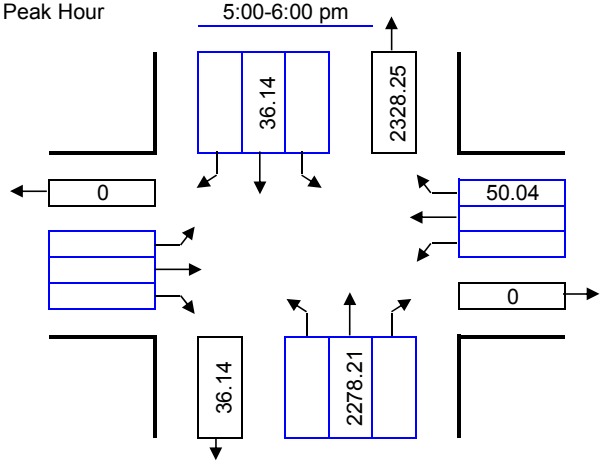

Right Turns Subtracted for Exclusive Right Turn Overlap Phasing or Right Turn on Red:

		AM		PM	
NB Approach:	Rock Creek and Potomac Pkwy	NB		NB	
SB Approach:	Rock Creek and Potomac Pkwy	SB		SB	
EB Approach:		EB		EB	
WB Approach:	F St, NW	WB	13	WB	36

Number of Lanes	Lane Use Factor	Service Level		Critical Lane Volume	Opposing Volume (vph)		PCE
1 =	1.00	A	≤	1000	≤	199	1.1
2 =	0.55	B	≤	1150	≤	599	2.0
3 =	0.40	C	≤	1300	≤	799	3.0
4 =	0.30	D	≤	1450	≤	999	4.0
Dbl-left	0.60	E	≤	1600	≥	1000	5.0
		F	>	1600			

Movement	Volume	PCE	Lane Use Factor	Lane Volume	Opposing Lefts	Critical Lane Volume	*
NBT	65.33	1.00	0.55	36	0	36	
SBT	2823.09	1.00	0.55	1553	0	1553	*
WBR	5.07	1.00	1.00	5	0	5	*
					Critical Volume	1558	E
					V/C	0.97	

Movement	Volume	PCE	Lane Use Factor	Lane Volume	Opposing Lefts	Critical Lane Volume	*
NBT	2278.21	1.00	0.55	1253	0	1253	*
SBT	36.14	1.00	0.55	20	0	20	
WBR	14.04	1.00	1.00	14	0	14	*
					Critical Volume	1267	C
					V/C	0.79	

Movement	WBL	WBR	NBT	NBR	SBL	SBT
Lane Configurations						
Volume (vph)	0	0	65	13	0	2823
Ideal Flow (vphpl)	1900	1900	1900	1900	1900	1900
Total Lost time (s)			4.0			4.0
Lane Util. Factor			0.95			0.95
Frpb, ped/bikes			0.99			1.00
Flpb, ped/bikes			1.00			1.00
Frt			0.98			1.00
Flt Protected			1.00			1.00
Satd. Flow (prot)			3490			3610
Flt Permitted			1.00			1.00
Satd. Flow (perm)			3490			3610
Peak-hour factor, PHF	0.92	0.92	0.92	0.92	0.92	0.92
Adj. Flow (vph)	0	0	71	14	0	3068
RTOR Reduction (vph)	0	0	2	0	0	0
Lane Group Flow (vph)	0	0	83	0	0	3068
Confl. Peds. (#/hr)				60	60	
Turn Type		custom				
Protected Phases			2			6
Permitted Phases		8				
Actuated Green, G (s)			131.4			131.4
Effective Green, g (s)			131.4			131.4
Actuated g/C Ratio			0.88			0.88
Clearance Time (s)			4.0			4.0
Vehicle Extension (s)			3.0			3.0
Lane Grp Cap (vph)			3057			3162
v/s Ratio Prot			0.02			c0.85
v/s Ratio Perm						
v/c Ratio			0.03			0.97
Uniform Delay, d1			1.2			7.7
Progression Factor			1.00			1.00
Incremental Delay, d2			0.0			10.4
Delay (s)			1.2			18.1
Level of Service			A			B
Approach Delay (s)	0.0		1.2			18.1
Approach LOS	A		A			B

Intersection Summary			
HCM Average Control Delay	17.7	HCM Level of Service	B
HCM Volume to Capacity ratio	0.97		
Actuated Cycle Length (s)	150.0	Sum of lost time (s)	18.6
Intersection Capacity Utilization	81.4%	ICU Level of Service	D
Analysis Period (min)	15		

c Critical Lane Group

Movement	WBL	WBR	NBT	NBR	SBL	SBT
Lane Configurations						
Volume (vph)	0	0	2278	90	0	36
Ideal Flow (vphpl)	1900	1900	1900	1900	1900	1900
Total Lost time (s)			4.0			4.0
Lane Util. Factor			0.95			0.95
Frpb, ped/bikes			1.00			1.00
Flpb, ped/bikes			1.00			1.00
Frt			0.99			1.00
Flt Protected			1.00			1.00
Satd. Flow (prot)			3582			3610
Flt Permitted			1.00			1.00
Satd. Flow (perm)			3582			3610
Peak-hour factor, PHF	0.92	0.92	0.92	0.92	0.92	0.92
Adj. Flow (vph)	0	0	2476	98	0	39
RTOR Reduction (vph)	0	0	1	0	0	0
Lane Group Flow (vph)	0	0	2573	0	0	39
Confl. Peds. (#/hr)				60	60	
Turn Type		custom				
Protected Phases			2			6
Permitted Phases		8				
Actuated Green, G (s)			131.4			131.4
Effective Green, g (s)			131.4			131.4
Actuated g/C Ratio			0.88			0.88
Clearance Time (s)			4.0			4.0
Vehicle Extension (s)			3.0			3.0
Lane Grp Cap (vph)			3138			3162
v/s Ratio Prot			c0.72			0.01
v/s Ratio Perm						
v/c Ratio			0.82			0.01
Uniform Delay, d1			4.1			1.2
Progression Factor			1.00			1.00
Incremental Delay, d2			2.5			0.0
Delay (s)			6.6			1.2
Level of Service			A			A
Approach Delay (s)	0.0		6.6			1.2
Approach LOS	A		A			A

Intersection Summary			
HCM Average Control Delay	6.5	HCM Level of Service	A
HCM Volume to Capacity ratio	0.82		
Actuated Cycle Length (s)	150.0	Sum of lost time (s)	18.6
Intersection Capacity Utilization	69.3%	ICU Level of Service	C
Analysis Period (min)	15		

c Critical Lane Group

Intersection: 3: Kennedy Center Peds & Rock Creek Parkway

Movement	NB	NB	SB	SB
Directions Served	T	TR	T	T
Maximum Queue (ft)	31	53	533	533
Average Queue (ft)	1	7	471	491
95th Queue (ft)	10	29	680	684
Link Distance (ft)	711	711	518	518
Upstream Blk Time (%)			12	13
Queuing Penalty (veh)			0	0
Storage Bay Dist (ft)				
Storage Blk Time (%)				
Queuing Penalty (veh)				

Network Summary

Network wide Queuing Penalty: 0

Intersection: 3: Kennedy Center Peds & Rock Creek Parkway

Movement	NB	NB	SB	SB
Directions Served	T	TR	T	T
Maximum Queue (ft)	502	530	30	31
Average Queue (ft)	224	249	3	3
95th Queue (ft)	441	488	16	19
Link Distance (ft)	711	711	518	518
Upstream Blk Time (%)				
Queuing Penalty (veh)				
Storage Bay Dist (ft)				
Storage Blk Time (%)				
Queuing Penalty (veh)				

Network Summary

Network wide Queuing Penalty: 0

Appendix D

Garage Service Rate Data

Parking Data Breakdown

Gate Service Rate 39 veh/15min

156 veh/hr

		Vehicle Arrival Rate	No. of Gates Needed	
			Calculated	Adjusted
Weekday	Peak 15min	78	2.0	2
	Peak Hour	262	1.7	2
Weekend	Peak 15min	104	2.7	3
	Peak Hour	336	2.2	3

Parking Garage Intake Volumes Breakdown

8.15.2013 Thursday 17:45PM to 19:45PM 15-min Interval

		A	C4	C6	C7	B1	B2	A1	A2			
Start	End	N. Employee	N. Public							15 min	Hour	
17:45	18:00	2	0	4	16	5	7	9	15	58		
18:00	18:15	1	0	9	19	5	5	2	7	48		
18:15	18:30	1	1	7	12	9	9	3	9	51		
18:30	18:45	2	0	11	11	7	12	7	14	64	221	
18:45	19:00	1	8	22	28	13	16	16	21	125	288	
19:00	19:15	1	1	12	11	9	10	17	22	83	323	
19:15	19:30	0	0	4	2	6	11	1	3	27	299	
19:30	19:45	0	0	0	0	1	0	0	0	1	236	
	Total	8	10	69	99	55	70	55	91	457		

Parking Garage Intake Volumes Breakdown

12.21.2012 Friday 17:45PM to 19:45PI 15-min Interval

		A	B3	C4	C6	C7	B1	B2	A1	A2		
Start	End	N. Employee	NSO Employee	N. Public							15 min	Hour
17:45	18:00	3	0	9	19	19	19	12	11	9	101	
18:00	18:15	4	0	9	22	22	11	9	12	25	114	
18:15	18:30	4	1	3	24	25	16	14	15	12	114	
18:30	18:45	2	1	3	39	36	21	7	22	22	153	482
18:45	19:00	0	1	16	39	37	27	32	26	25	203	584
19:00	19:15	1	2	12	39	38	31	30	29	30	212	682
19:15	19:30	1	8	11	31	28	25	24	26	25	179	747
19:30	19:45	2	3	2	17	12	14	17	19	21	107	701
	Total	17	16	65	230	217	164	145	160	169	1183	